**ISSN** 1672-9145 **Acta Biochimica et Biophysica Sinica** 2007, **39**(5): 351–358 **CN** 31-1940/Q

# Cloning and Expression Analysis of *p26* Gene in *Artemia sinica*

Lijuan JIANG[1], Lin HOU[1]*, Xiangyang ZOU[2], Ruifeng ZHANG[1], Jiaqing WANG[1], Wenjing SUN[1], Xintao ZHAO[1], and Jialu AN[1]

[1] *College of Life Sciences, Liaoning Normal University, Dalian 116029, China;*
[2] *Department of Biology, Dalian Medical University, Dalian 116027, China*

**Abstract** The protein p26 is a small heat shock protein that functions as a molecular chaperone to protect embryos by preventing irreversible protein damage during embryonic development. A 542 bp fragment of the *p26* gene was cloned and sequenced. The fragment encoded 174 amino acid residues and the amino acid sequence contained the α-crystallin domain. Phylogenetic analysis showed that eight *Artemia* populations were divided into four major groups. *Artemia sinica* (YC) belonged to the East Asia bisexual group. Expression of the *p26* gene at different developmental stages of *A. sinica* was quantified using real-time quantitative polymerase chain reaction followed by cloning and sequencing. The relationship between the quantity of *p26* gene expression and embryonic development was analyzed. The results indicated that massive amounts of p26 were expressed during the development of *A. sinica*. At the developmental stage of 0 h, *A. sinica* expressed the highest level of p26. As development proceeded, expression levels of the *p26* gene reduced significantly. There was a small quantity of *p26* gene expression at the developmental stages of 16 h and 24 h. We concluded that p26 might be involved in protecting the embryo from physiological stress during embryonic development.

**Key words** *Artemia sinica*; cloning; expression; *p26* gene; real-time quantitative PCR

*Artemia* is a small crustacean distributed widely in hypersaline environments all over the world [1–4]. The nauplii that contain abundant proteins and fatty acids are not only suitable feeds for aquaculture but also used as favorable experimental models.

*Artemia* undergoes two alternative developmental pathways. During ovoviviparous development, embryos develop directly into swimming nauplii and are released from the female. In contrast, during oviparous development, the embryonic development is arrested at the late gastrula stage and embryos are yielded as encysted gastrulae (cysts) from the female [5,6]. The cysts are confined in a complex shell that is largely impermeable to nonvolatile molecules, and enter into a deep dormant state known as diapause [7,8]. Diapause embryos bring their metabolism to a reversible standstill [9]. However, they are remarkably resistant to the greatest physiological stress, including exposure to long-term anoxia [10,11], temperature extremes [5,11,12], desiccation [13], γ-irradiation, repeated hydration-dehydration and exposure to organic solvents [8]. Diapause can be terminated by environmental cues such as cold or dehydration [7,8], and the activated embryos require permissive conditions such as adequate water, temperature and molecular oxygen for resuming development [14]. *Artemia* embryos can tolerate these remarkable stresses and are able to resume development depending on a low molecular mass protein p26, which constitutes approximately 10%–15% of the non-yolk protein [15,16].

p26 is a small heat shock/α-crystallin protein composed of polypeptide subunits of 26 kDa [15], and native p26 exists as oligomers with a molecular mass of approximately 700 kDa [17]. p26 functions as a molecular chaperone *in vitro* [6,16–18], prevents irreversible protein denaturation and aggregation [20] and inhibits apoptosis [21]. p26 also confers thermotolerance on transformed *Escherichia coli* [21,22].

Received: January 9, 2007 Accepted: March 9, 2007
This work was supported by a grant from the National Natural Science Foundation of China (No. 30271035)
*Corresponding author: Tel, 86-411-84258681; Fax, 86-411-84258306; E-mail, houlin@lnnu.edu.cn

DOI: 10.1111/j.1745-7270.2007.00287.x

©Institute of Biochemistry and Cell Biology, SIBS, CAS

Research of p26 has mainly focused on *Artemia franciscana*, but much less is known about *Artemia sinica*. There are no reports on the expression of the *p26* gene of *A. sinica*. Research on early embryonic development of gene expression of *A. sinica* has significant importance for learning gene regulation of embryonic development and gene function.

In the present study we evaluated the expression of the *p26* gene at different developmental stages of *A. sinica* by real-time quantitative polymerase chain reaction (PCR). The relationship between the quantity of *p26* gene expression at different developmental stages and the embryonic development was also analyzed, in order to shed light on the function and regulation of genes during early embryonic development.

## Materials and Methods

### Sample collection

*Artemia sinica* cysts, which were in diapause, were collected from Yun Cheng (China). The cysts were cultured in natural seawater at our laboratory following the procedure described by Sun *et al*. [23] and development resumed. Cysts or nauplii were collected at the developmental stages of 0, 4, 8, 12, 16, and 24 h. The seven other bisexual *Artemia* populations (**Table 1**) also used in our laboratory were provided by the *Artemia* Reference Center, Ghent, Belgium.

### RNA isolation

Fifty milligrams of cysts or nauplii were rinsed in distilled water, then isolated by Trizol Reagent (Invitrogen, Carlsbad, USA) according to the manufacturer's instructions. To remove genomic DNA contamination, total RNA was digested with RNase-free DNase I (Promega, Madison, USA). The RNA pellet was dissolved in 50 μl of diethylpyrocarbonate-treated distilled water. The integrity of the RNA was examined by electrophoresis in 1% agarose gel containing formaldehyde. The concentration of RNA was determined by a DU-640 spectrophotometer (Beckman, Fullerton, USA) measuring absorbance at 260 nm and 280 nm. Purity of the RNA preparations was determined by an absorbance ratio ($A_{260}$:$A_{280}$). Total RNA was stored at −80 ºC for later use.

### Reverse transcription (RT)-PCR and sequencing of *p26* gene

cDNA was reversely transcribed using the ExScript RT reagent kit (TaKaRa, Dalian, China) with oligo $d(T)_{18}$ as primer. Ten microliters of final reaction volume contained 2.5 μM oligo $d(T)_{18}$, 50 mM Tris-HCl (pH 8.3), 75 mM KCl, 10 mM dithiothreitol, 8 mM $MgCl_2$, 0.5 mM dNTP, 1 U RNase inhibitor, 5 U Moloney murine leukemia virus reverse transcriptase, and 100 ng RNA of different developmental stages. RT was carried out in PCR Thermal Cycler Dice (TaKaRa) at 42 ºC for 10 min, followed by an inactivation step at 95 ºC for 2 min. cDNA was used for PCR or stored at −20 ºC for use.

A pair of primers, p26-F1 (5′-TACGGAGGATTTGGT-GGTATG-3′, forward) and p26-R1 (5′-CTTGTTGATCTT-GCTGGAGTTG-3′, reverse), were designed according to conserved regions of *p26* gene sequences of *A. sinica* available from the GenBank database (accession number DQ310576) using Primer Premier 5.0 software (http://www.premierbiosoft.com/). These primers targeted a fragment of 542 bp. The PCR reactions were carried out in a final volume of 20 μl containing buffer (2.0 μl), 2.5 mM dNTP (1.6 μl), 10 pM primer (1.0 μl), 1 U of *Taq* polymerase, 1 μl cDNA and water to 20 μl. PCR was carried out by an initial denaturation at 95 ºC for 5 min, followed by 35 cycles of 94 ºC denaturation for 45 s, 55 ºC annealing for 1 min, and a 72 ºC extension for 1 min.

**Table 1 Bisexual *Artemia* populations used previously in this study**

| Species and population | Collection location | Collection time | Chromosome no. | Abbreviation |
|---|---|---|---|---|
| *A. franciscana* | San Francisco Bay, USA | 1996 | 42 | SFB |
| *A. persimilis* | Buenos Aires, Argentina | 1996 | 44 | AP |
| *A. sinica* | YunChen, ShanXi, China | 2004 | 42 | YC |
| | NaLin, Inner Mongolia, China | 1993 | 42 | NL |
| | Baiyancuo, Inner Mongolia, China | 1993 | 42 | BY |
| *A. urmiana* | Urmia Lake, Iran | 2003 | 42 | UM |
| *Artemia sp.* | Qi Xiang Cuo, Tibet, China | 2000 | 42 | QXC |
| | Kazakhstan | 1996 | 42 | KZ |

©Institute of Biochemistry and Cell Biology, SIBS, CAS

Amplification cycles were followed by a final 7 min extension at 72 ºC. The size and quality of PCR products were determined by running in 1.5% agarose gels. PCR products were separated electrophoretically in 2.0% agarose gels and stained with ethidium bromide in TAE buffer. After separation, the PCR products were extracted from the agarose gels with an Agarose Gel DNA Purification Kit (TaKaRa), cloned into pMD 18-T vector, then sequenced using an ABI 1377 automated sequencer (Applied Biosystems, Foster City, USA).

### Sequence analysis and phylogenetic tree construction

Sequences were analyzed using the National Center for Biotechnology Information BLAST search program (http://www.ncbi.nlm.nih.gov/). Nucleic acid sequences were aligned with sequences of seven other bisexual *Artemia* populations sequenced previously in our laboratory using CLUSTALW version 1.81 software (http://www.ebi.ac.uk/clustalw/). Genetic distances were estimated using the MEGA3 software package (http://www.megasoftware.net/) based on the Kimura 2-parameter model (transition and transversion). Neighbor-joining and unweighted pair group method with arithmetic mean (UPMGA) methods in MEGA3 were used to construct phylogenetic trees. Statistical significance of groups within inferred trees was evaluated using the bootstrap method with 1000 replications.

### Real-time quantitive PCR

Two gene-specific primers, p26-F2 and p26-R2, were designed on the basis of the 542 bp fragment of *p26* gene sequences that were sequenced in this study, and the primers for actin were designed based on the conserved sequences of the actin gene of *Artemia* by Primer Express 2.0 software (Applied Biosystems). The primers are listed in **Table 2**. The PCR reaction was carried out using the SYBR ExScript RT-PCR Kit (TaKaRa). Real-time quantitative PCR amplifications were carried out in Line-Gene 33 (Bioer, Hangzhou, China). The reactions were carried out in a 25 μl reaction volume containing SYBR Premix Ex *Taq* (2×) 12.5 μl, forward and reverse primer (0.2 μM) respectively, cDNA 2 μl, and water to the volume of 25 μl. PCR was carried out by an initial denaturation at 95 ºC for 10 s, followed by 45 cycles each of denaturation at 95 ºC for 5 s, annealing at 60 ºC for 20 s. To control the variation in sampling and processing among samples, the *Artemia* actin gene was amplified in parallel with the *p26* gene. Negative control reactions contained no template cDNA, instead of RNase-free water. Each sample was replicated twice at the same time. All experiments were repeated at least twice independently to ensure the reproducibility of the results.

We selected the samples containing the highest amount of actin or *p26* gene as the standard templates. Each template contained a dilution series of 5 pg, 50 pg, 500 pg, 5 ng, 50 ng, and 500 ng of template RNA, and they were reversely transcribed and amplified by real-time quantitative PCR as described above. Fifty nanograms of RNA corresponded to $10^6$ copies. Two standard curves were constructed according to the cycle number (*CT*) value of the standard template against template concentration (Log concentration).

### Data analysis of real-time quantitative PCR

Target RNA concentrations and *CT* values are inversely related. The quantities of actin and *p26* genes in the experimental samples were determined by extrapolating the *CT* values from the standard curves of the standard templates. The relative level of *p26* gene was evaluated on the fact that the quantity of *p26* gene normalized to the level of actin as an internal control. For data analysis, the data of relative levels was exported into Microsoft Excel for statistical analysis. Differences were analyzed by an unpaired, two-tailed *t*-test. Statistical significance was set at $P<0.05$.

## Results

### Cloning and sequence analysis of *p26* gene

A 542 bp fragment of the *p26* gene at each develop-

**Table 2** **Primers used for real-time quantitative polymerase chain reaction analysis of *Artemia* actin and p26 genes**

| Gene name | Sequence of primers (5′→3′) | Size of predicted products | Annealing temperature |
|---|---|---|---|
| Actin | GGTCGTGACTTGACGGACTATCT (F) | 147 bp | 61.81 ºC |
| | AGCGGTTGCCATTTCTTGTT (R) | | 61.91 ºC |
| *p26* | CCAGAATCTGTGTCATCTAC (F2) | 133 bp | 61.88 ºC |
| | CCCCTTCAATCCTTCCAACA (R2) | | 62.14 ºC |

mental stage was amplified by primers p26-F1 and p26-R1 (**Fig. 1**), matching the expected size based on the *p26* gene sequences of *A. sinica* retrieved from GenBank. A GenBank database search revealed that the fragment displayed 96% sequence identity with the sequence of *A. urmiana* (accession No. DQ310580), 95% identity sequence with the sequences of *A. parthenogenetica* (accession No. DQ310589) and *A. franciscana* (accession No. DQ310577), and 91% sequence identity with the sequence of *A. persimilis* (accession No. DQ310578). The fragment encoded 174 amino acid residues and the amino acid sequence contained an α-crystallin domain [24]. Nucleotide and deduced amino acid sequences of the *p26* gene are shown in **Fig. 2**. Analysis of the deduced amino acid sequence showed that the amino acid sequences displayed 100% sequence identity with the sequence of *A. sinica* (accession No. ABC41137) and 98% sequence identity with the sequence of *A. franciscana* (accession No. ABC41138). Phylogenetic trees were constructed using neighbor-joining and UPMGA methods (**Fig. 3**). Resulting topologies for the phylogenetic trees of *Artemia* populations were very similar, indicating that they support each other. Eight *Artemia* populations were divided into four major groups: group 1, Middle Asia bisexual group (KZ, UM and QXC); group 2, East Asia bisexual group (BY, NL and YC); group 3, North America bisexual group (SFB) and group 4, South America bisexual group (AP). All the bootstrap values for the branches separating the four groups and the bootstrap values within every branch separating different population were high. There was a small difference within the East Asia bisexual group between two phylogenetic trees, YC and BY were in a clade [**Fig. 3(A)**] but YC and NL were in a clade [**Fig. 3**

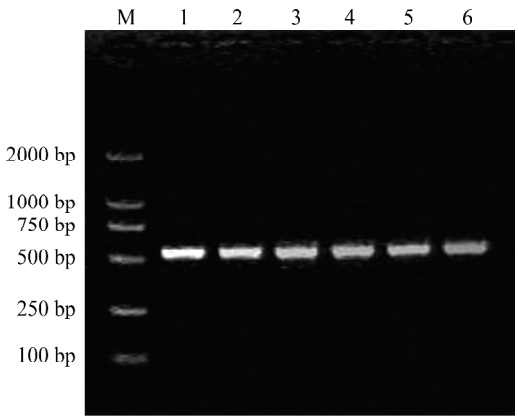


**Fig. 1 Agarose gel analysis of *p26* gene of *Artemia sinica* by reverse transcription-polymerase chain reaction (RT-PCR)**

Total RNA of *Artemia sinica* at different developmental stages was amplified by RT-PCR. M, DL2000 marker; 1–6, RT-PCR products of *Artemia sinica* at the developmental stages of 0, 4, 8, 12, 16 and 24 h, respectively.

```
  1 TACGGAGGATTTGGTGGTATGGGCGACCCATGGTCTGATCCGTTTGGATTTGGTGGCATC
                        M  G  D  P  W  S  D  P  F  G  F  G  G  I
 61 GGAGGTGGCATGGACCTCGACATTGACAGGCCCTTCCGGAGAAGAATGATGAGAAGAGCT
     G  G  G  M  D  L  D  I  D  R  P  F  R  R  R  M  M  R  R  A
121 CCAGATACCAGTAGGGCTTTAAAAGAGCTAGCTACTCCTGGGTCTCTGAGGGACACTGCT
     P  D  T  S  R  A  L  K  E  L  A  T  P  G  S  L  R  D  T  A
181 GATGAATTTCAAGTTCAGCTAGATGTTGGTCACTTTCTACCAAATGAAATTACAGTCAAG
     D  E  F  Q  V  Q  L  D  V  G  H  F  L  P  N  E  I  T  V  K
241 ACCACCGACGATGATATTCTTGTCCATGGCAAACACGACGAGCGGTCCGATGAATATGGA
     T  T  D  D  D  I  L  V  H  G  K  H  D  E  R  S  D  E  Y  G
301 CACGTCCAAAGAGAATTTCGACGACGATACAGACTCCCAGAACATGTCAAACCAGAATCT
     H  V  Q  R  E  F  R  R  R  Y  R  L  P  E  H  V  K  P  E  S
361 GTGTCATCTACTTTGTCATCAGATGGTGTCTTAACTATCCATGCTCCTAAAACTGCTTTG
     V  S  S  T  L  S  S  D  G  V  L  T  I  H  A  P  K  T  A  L
421 AGCTCACCAACGGAACGTATCGTACCCATCACACCAGCGCCAGCTGTTGGAAGGATTGAA
     S  S  P  T  E  R  I  V  P  I  T  P  A  P  A  V  G  R  I  E
481 GGGGGCACTGCCGGTACTACTACAGGCAGTACAGCTAGTTCAACTCCAGCAAGATCAACA
     G  G  T  A  G  T  T  T  G  S  T  A  S  S  T  P  A  R  S  T
541 AG
```

**Fig. 2 Nucleotide sequences and deduced amino acid sequences of the *p26* gene of *Artemia sinica***

The nucleotide sequences are numbered from the 5′ end and the numbers are shown on the left. The single-letter amino acid codes are shown below the nucleotide sequences. Locations of primers used for real-time quantitive polymerase chain reaction are in bold.

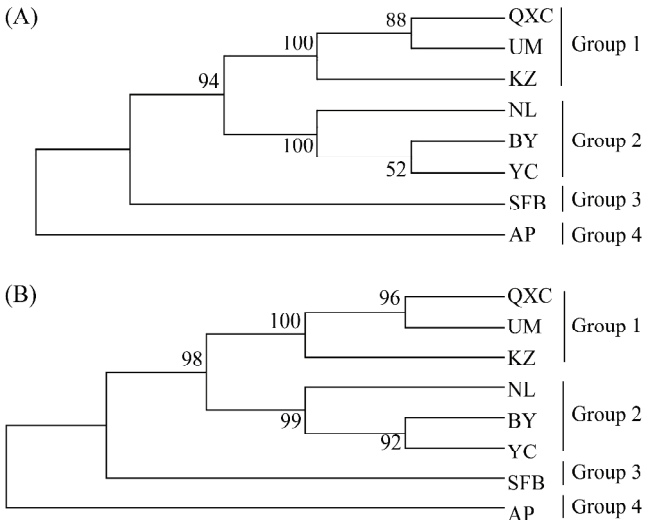


**Fig. 3 Phylogenetic tree constructed by the neighbor-joining (A) and UPGMA (B) analysis based on *p26* gene fragments of eight different bisexual *Artemia* populations (1000 replications of bootstrapping)**

AP, *A. persimilis* (Buenos Aires, Argentina); KZ, *Artemia* sp. (Kazakstan); NL, *A. sinica* (Nalin, Inner Mongolia, China); QXC, *Artemia* sp. (Qi Xiang Cuo, Tibet, China); SFB, *A. Artemia* (San Francisco, USA); UM, *A. urmiana* (Urmia Lake, Iran); YC, *Artemia sinica* (Yunchen, Shanxi Province, China).

©Institute of Biochemistry and Cell Biology, SIBS, CAS

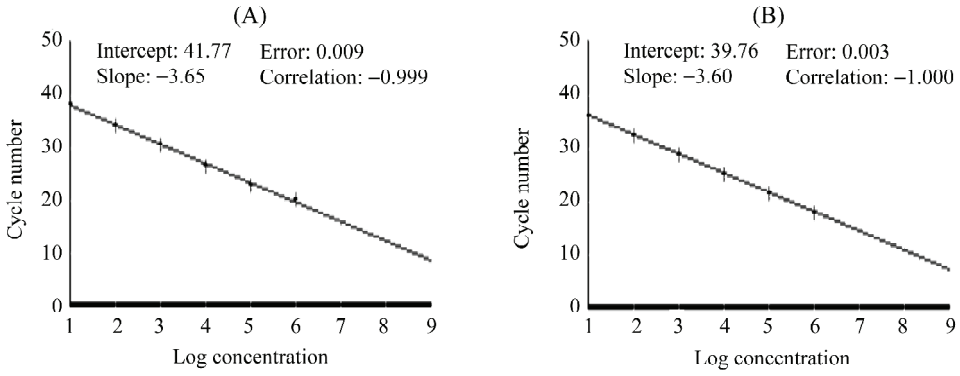


**Fig. 4 Standard curves for RNA standard templates of actin gene (A) and *p26* gene (B)**

Serial 10-fold dilutions of RNA standard templates were reversely transcribed and amplified by real-time quantitive polymerase chain reaction. The correlation, slope and intercept are shown on the figure.

**(B)**]. *A. persimilis* seemed to be closer to the ancestral group of species, supported by the conclusion that *A. sinica*, *A. urmiana* and *A. Artemia* originated from *A. persimilis* at different times [25].

### Detectability and linearity of real-time quantitative PCR

The experimental results suggested that the samples selected as standard templates were appropriate, and we obtained good standard curves from the templates (**Fig. 4**). Both standard curves showed a broad linear range from $10^1$ to $10^6$ copies. The slopes of the regression lines for actin and the *p26* gene were –3.65 and –3.60, respectively. Correlation coefficients of standard curves were –0.999 and –1.000, respectively, indicating credibility of the result. The equations of the regression curves (Y) were: Y=–3.65 (LogX)+41.77 and Y=–3.60(LogX)+39.76, respectively.

### Specificity of real-time quantitative PCR

The specificity of the products was analyzed by the amplification profiles and the corresponding dissociation curves. **Fig. 5** provides examples of amplification profiles and the corresponding dissociation curves for *p26* and actin control gene products. The amplification profiles for actin and *p26* products are shown in panels A and C, respectively. The dissociation curves for actin and p26 products are shown in panels B and D, respectively. The temperature values of actin and *p26* gene amplifications are indicated above their corresponding dissociation curves. Both dissociation curves have a single, sharp peak at the uniform temperature values of 83 °C and 83.5 °C. Analysis of the dissociation curves of the amplified products indicated that the amplifications were specific.

### Expression of *p26* gene and relationship to embryonic development

Relative mRNA levels of the *p26* gene at different developmental stages are shown in **Fig. 6**. The *p26* gene was expressed at all developmental stages of *A. sinica*. The expression levels of the *p26* gene decreased as development proceeded. Differences were statistically significant between the stage of 0 h and other developmental stages ($P<0.05$). There were large amounts of *p26* gene at the developmental stage of 0 h, when embryos were still in diapause, but levels changed as the embryos began to develop. At the developmental stage of 4 h, the expression level of the *p26* gene was approximately 51% of that at 0 h, and approximately 19% and 11% of 0 h at the developmental stages of 8 h and 12 h, respectively. Embryos were in cysts at the developmental stages of 0, 4, 8 and 12 h. The cysts were confined in a complex shell and were largely impermeable to nonvolatile molecules. p26 played a role in preventing denaturation and aggregation of proteins and assisting in their folding. After the developmental stage of 12 h, the embryo is in the process of emerging from its protective cyst wall. There was little p26 activity at developmental stages 16 and 24 h because, by the developmental stage of 16 h, most of the nauplii had emerged. Once the nauplii are out of their shells, they become independent of p26 and can obtain suitable conditions to survive.

## Discussion

There has been much research on the phylogenetic re-

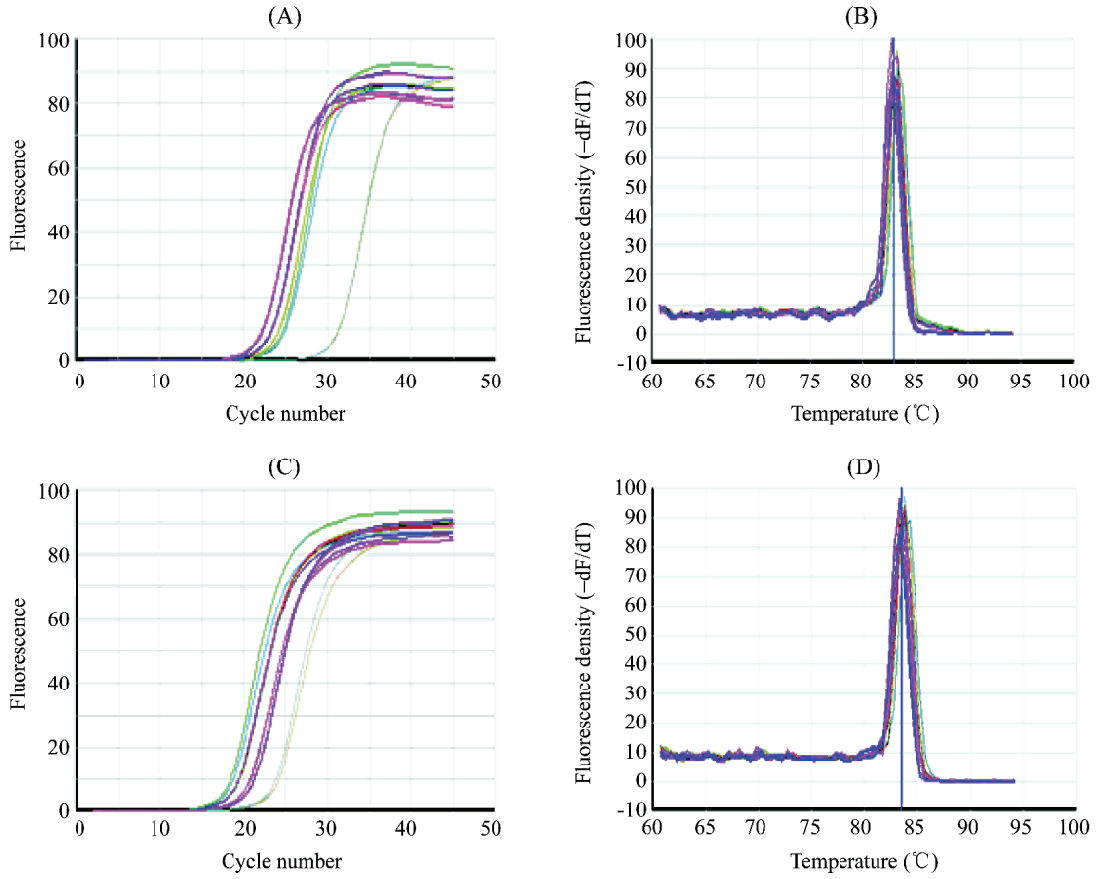


**Fig. 5 Amplification profiles and corresponding dissociation curves for actin and *p26* gene samples**

Amplification profiles (A) and dissociation curves (B) for actin gene. Amplification profiles (C) and dissociation curves (D) for *p26* gene. The temperature values of actin and *p26* gene products are indicated above the dissociation curves.

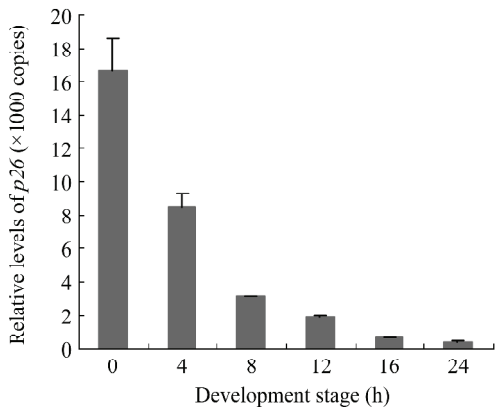


**Fig. 6 Relative levels of *p26* gene at different developmental stages of *Artemia sinica* by real-time quantitative polymerase chain reaction**

Quantity of *p26* gene was normalized to the actin gene as the internal standard. Data are presented as mean±SD ($n$=3).

lationships of *Artemia* [25−28], but the phylogenetics of the bisexual *Artemia* have not been resolved. In the present study, we analyzed the phylogenetic relationships of bisexual *Artemia* using a nuclear protein-coding gene. We could conclude from the phylogenetic tree in **Fig. 3** that *A. persimilis* seems to be closer to the ancestral group of species. This result is consistent with the finding that *A. sinica*, *A. urmiana* and *A. Artemia* originated from *A. persimilis*, which belongs to a primitive group of species, at different times [28]. Both phylogentic trees in the present study showed that the Chinese populations, except the population from Tibet (QXC), were clustered together in the *A. sinica* clade. We can conclude that the bisexual *Artemia* population from Tibet does not belong to *A. sinica*. The results of the present study support the view that the Tibet group and the Inner Mongolia group can clearly be divided into two groups [29].

©Institute of Biochemistry and Cell Biology, SIBS, CAS

To our knowledge, this is the first report to relatively quantify the expression of *p26* mRNA at different developmental stages of *A. sinica* by real-time quantitative PCR and analyze the relationship between expression quantity and embryonic development. Many reports have focused on the *p26* gene in *A. franciscana*, but much less was known about the *p26* gene in *A. sinica*. We studied the *p26* gene in *A. sinica* in detail here. We quantified relatively the expression of *p26* gene of *A. sinica* at the mRNA level from the embryonic developmental stage of cysts to nauplii, and the results indicated that *A. sinica* expressed p26 at all the developmental stages. Previous studies indicated that *Artemia* embryos synthesized massive amounts of p26 [11,18,22]. In this study, we found that the embryos contained a lot of p26, which was consistent with previous publications. When developed at 0 h, embryos contained the highest level of the *p26* gene. At this time embryos were still in diapause, at a stage of developmental and metabolic arrest when stress was high. The embryos' survival depended on p26, which functioned as a molecular chaperone by preventing denaturation and aggregation of proteins and assisting in their folding. Furthermore, p26 is degraded during the development of swimming larvae [18,22]. These observations were extended in this paper. p26 decreased as development proceeded and underwent a marked reduction during emergence of nauplii. It may be that the cysts were incubated in adequate water, temperature and molecular oxygen, the conditions resumed development and were suitable for them to survive, so the level of p26 decreased during development. Thus we concluded that p26 might play an important role in protecting embryos from stress during *A. sinica* embryonic development. Some studies suggested that p26 was embryo-specific, and was synthesized only in embryos that were encysted and enter into diapause [11,22]. We found that nauplii also expressed the *p26* gene. It may be that the embryos did not develop isochronously and the method we used was sensitive, and could detect small amounts of *p26* gene expression.

Synthesis of p26 is developmentally regulated and does not occur in response to stress [18,22]. In the present study, each sample expressed p26, but the experimental conditions employed were the same throughout the whole experiment. However, there were different expression levels of the *p26* gene during development. We speculate, therefore, that the synthesis of the *p26* gene is controlled by developmental cues. The synthesis of some small heat shock proteins is induced by stress but others are expressed constitutively or in response to developmental cues and aging [30–32]. For example, the synthesis of Ha hsp17.6 G1 from sunflower [33], hsp25 from mammal [34] and HSP12.6 from the nematode *Caenorhabditis elegans* [31, 35] is not induced by stress.

Real-time quantitative PCR using SYBR Green I as a fluorescence dye is a rapid, highly sensitive and quantitative method [36,37]. In this study, we obtained good standard curves and amplification profiles and the corresponding dissociation curves, indicating the method used in the present study was reproducible and credible. Analyzing the dissociation curves of the amplified products indicated that the amplifications of the products were specific. We detected actin and the *p26* gene in a broad range with high efficiency, specificity and reproducibility by real-time quantitative PCR.

In conclusion, p26 was abundantly expressed during development in *A. sinica*, and its level of expression changed at different developmental stages. Future work will concentrate on the synthesis, structure, and function of p26 in *A. sinica*, in order to understand the functions of small heat shock during embryonic development.

## Acknowledgements

The authors thank Drs Hans-Uwe DAHMS, Wanxi YANG, Shengtao HOU and Wei ZOU for their critical reading of this manuscript.

## References

1 Persoone G, Sorgeloos P. General aspects of the ecology and bigeography of *Artemia*. In: Persoone G, Sorgeloos P, Roels O, Jaspers E eds. The brine shrimp *Artemia*. Vol 3. Proceedings of the International Symposium on the brine shrimp *Artemia salina*. Wetteren: Universa Press 1980

2 MacRae TH, Bagshaw JC, Warner AH. Biochemistry and cell biology of *Artemia*. Boca Raton: CRC Press 1989

3 Warner AH, MacRae TH, Bagshaw JC. Cell and molecular biology of *Artemia* development. New York: Plenum Press 1989

4 Browne RA, Sorgeloos P, Trotman CNA. *Artemia* Biology. Boca Raton: CRC Press 1991

5 Clegg JS, Conte FP. A review of the cellular and developmental biology of *Artemia*. In: Persoone G, Sorgeloos P, Roels O, Jaspers E eds. The Brine Shrimp *Artemia*. Vol 7. Wetteren: Universa Press 1980

6 Liang P, Amons R, MacRae TH, Clegg JS. Purification, structure and *in vitro* molecular-chaperone activity of *Artemia* p26, a small heat-shock/alpha-crystallin protein. Eur J Biochem 1997, 243: 225–232

7 Drinkwater LE, Crowe JH. Regulation of embryonic diapause in *Artemia* environmental and physiological signals. J Exp Zool 1987, 241: 297–307

8 Drinkwater LE, Clegg JS. Experimental biology of cyst diapause. In: Browne RA, Sorgeloos P, Trotman CNA eds. *Artemia* biology. Boca Raton: CRC Press 1991

9 MacRae TH. Molecular chaperones, stress resistance and development in *Artemia franciscana*. Semin Cell Dev Biol 2003, 14: 251–258

10 Clegg JS. Embryos of *Artemia franciscana* survive four years of continuous anoxia: The case for complete metabolic rate depression. J Exp Biol 1997, 200: 467–475
11 Clegg JS, Willsie JK, Jackson SA. Adaptive significance of a small heat shock/α-crystallin protein (p26) in encysted embryos of the brine shrimp: *Artemia franciscana*. Am Zool 1999, 39: 836–847
12 Clegg JS, Jackson SA. Aerobic heat shock activates trehalose synthesis in embryos of *Artemia franciscana*. FEBS Lett 1992, 303: 45–47
13 Clegg JS, Drost-Hansen W. On the biochemistry and cell physiology of water. In: Hochachka PW, Mommsen TP eds. Biochemistry and Molecular Biology of Fishes. Vol 1. Amsterdam: Elsevier Science Publishers 1990
14 Hand SC, Podrabsky JE. Bioenergetics of diapause and quiescence in aquatic animals. Thermochim Acta 2000, 349: 31–42
15 Clegg JS, Jackson SA, Warner AH. Extensive intracellular translocations of a major protein accompany anoxia in embryos of *Artemia franciscana*. Exp Cell Res 1994, 212: 77–83
16 Clegg JS, Jackson SA, Liang P, MacRae TH. Nuclear-cytoplasmic translocations of protein p26 during aerobic-anoxic transitions in embryos of *Artemia franciscana*. Exp Cell Res 1995, 219: 1–7
17 Liang P, Amons R, Clegg JS, MacRae TH. Molecular characterization of a small heat shock/alpha-crystallin protein in encysted *Artemia* embryos. J Biol Chem 1997, 272: 19051–19058
18 Jackson SA, Clegg JS. Ontogeny of low molecular weight stress protein p26 during early development of the brine shrimp, *Artemia franciscana*. Dev Growth Differ 1996, 38: 153–160
19 Willsie JK, Clegg JS. Small heat shock protein p26 associates with nuclear lamins and HSP70 in nuclei and nuclear matrix fractions from stressed cells. J Cell Biochem 2002, 84: 601–614
20 Day RM, Gupta JS, MacRae TH. A small heat shock/alpha-crystallin protein from encysted *Artemia* embryos suppresses tubulin denaturation. Cell Stress Chaperones 2003, 8: 183–193
21 Villeneuve TS, Ma X, Sun Y, Oulton MM, Oliver AE, MacRae TH. Inhibition of apoptosis by p26: Implications for small heat shock protein function during *Artemia* development. Cell Stress Chaperones 2006, 11: 71–80
22 Liang P, MacRae TH. The synthesis of a small heat shock/alpha-crystallin protein in *Artemia* and its relationship to stress tolerance during development. Dev Biol 1999, 207: 445–456
23 Sun Y, Zhong YC, Song WQ, Zhang RS, Chen RY. Detection of genetic relationships among four *Artemia* species using randomly amplified polymorphic DNA (RAPD). Int J Salt Lake Res 1999, 8: 139–147
24 Sun Y, Bojikova-Fournier S, MacRae TH. Structural and functional roles for beta-strand 7 in the alpha-crystallin domain of p26, a polydisperse small heat shock protein from *Artemia franciscana*. FEBS J 2006, 273: 1020–1034
25 Badaracco G, Bellorini M, Landsberger N. Phylogenetic study of bisexual *Artemia* using random amplified polymorphic DNA. J Mol Evol 1995, 41: 150–154
26 Badaracco G, Baratelli L, Ginelli E, Meneveri R, Plevani P, Valsasnini P Barigozzi C. Variation in repetitive DNA and heterochromatin in the genus *Artemia*. Chromosoma 1987, 95: 71–75
27 Landsberger N, Cancelli S, Carettoni D, Barigozzi C, Badaracco G. Nucleotide variation and molecular structure of the heterochromatic repetitive AluI DNA in the brine shrimp *Artemia franciscana*. J Mol Evol 1992, 35: 486–491
28 Perez ML, Valverde JR, Batuecas B, Amat F, Marco R, Garesse R. Speciation in the *Artemia* genus: Mitochondrial DNA analysis of bisexual and parthenogenetic brine shrimps. J Mol Evol 1994, 38: 156–168
29 Hou L, Qu RZ, Zou XY, Zheng YJ. The analysis of four bisexual *Artemia* strains by ISSR DNA finger prints. Journal of Liao Ning Normal University (Natural Science Edition) 2003, 26: 174–177
30 Ireland RC, Berger EM. Synthesis of low molecular weight heat shock peptides stimulated by ecdysterone in a cultured Drosophila cell line. Proc Natl Acad Sci USA 1982, 79: 855–859
31 Candido EPM. The small heat shock proteins of the nematode *Caenorhabditis elegans*: Structure, regulation and biology. In: Arrigo AP, Müller WEG eds. Small Stress Proteins. Berlin: Springer Verlag 2002
32 Fan GC, Chu G, Kranias EG. Hsp20 and its cardioprotection. Trends Cardiovasc Med 2005, 15: 138–141
33 Carranco R, Almoguera C, Jordano J. A plant small heat shock protein gene expressed during zygotic embryogenesis but noninducible by heat stress. J Biol Chem 1997, 272: 27470–27475
34 Davidson SM, Loones MT, Duverger O, Morange M. The developmental expression of small HSP. In: Arrigo AP, Müller WEG eds. Small Stress Proteins. Berlin: Springer Verlag 2002
35 Linder B, Jin Z, Freedman JH, Rubin CS. Molecular characterization of a novel, developmentally regulated small embryonic chaperone from *Caenorhabditis elegans*. J Biol Chem 1996, 271: 30158–30166
36 Holland PM, Abramson RD, Watson R, Gelfand DH. Detection of specific polymerase chain reaction product by utilizing the 5′-3′ exonuclease activity of *Thermus aquaticus* DNA polymerase. Proc Natl Acad Sci USA 1991, 88: 7276–7280
37 Livak KJ, Flood SJ, Marmaro J, Giusti W, Deetz K. Oligonucleotides with fluorescent dyes at opposite ends provide a quenched probe system useful for detecting PCR product and nucleic acid hybridization. PCR Methods Appl 1995, 4: 357–362

Edited by
**Yiquan WANG**

**©Institute of Biochemistry and Cell Biology, SIBS, CAS**