REVIEW

National Science Open
3: 20230051, 2024
https://doi.org/10.1360/nso/20230051

Engineering

Special Topic: Energy Systems of Low Carbon Buildings

Study on the hybrid energy storage for industrial park energy systems: Advantages, current status, and challenges

Jiacheng Guo[1,2], Jinqing Peng[1,2,*], Yimo Luo[1,2], Bin Zou[1,2] & Zhengyi Luo[1,2]

[1]*College of Civil Engineering, Hunan University, Changsha 410082, China;*
[2]*Key Laboratory of Building Safety and Energy Efficiency of the Ministry of Education, Changsha 410082, China*

*Corresponding author (email: jqpeng@hnu.edu.cn)

Received 22 August 2023; Revised 8 October 2023; Accepted 13 November 2023; Published online 17 November 2023

Abstract: In order to increase the renewable energy penetration for building and industrial energy use in industrial parks, the energy supply system requires transforming from a centralized energy supply mode to a distributed + centralized energy supply mode. The application of a hybrid energy storage system can effectively solve the problem of low renewable energy utilization levels caused by a spatiotemporal mismatch between the energy source and load. This study summarized the advantages and limitations of common energy storage technologies in industrial parks from the aspects of service life, response time, cycle efficiency and energy storage density, etc. The advantages of the hybrid energy storage system in industrial parks were also discussed in terms of sustainable development, climate change mitigation, social impact, and other aspects. The typical frameworks of hybrid energy storage were summarized, and the advantages, disadvantages, and application scenarios of each typical framework were analyzed. The current status of hybrid energy storage systems was summarized from the aspects of system modeling, hybrid energy storage mechanisms, design optimization, and operation dispatching. At the same time, the key challenges in modeling, regulation, and optimization of hybrid energy storage systems were discussed. This discussion leads to proposals for the direction of future research. The optimization methods and processes for designing and operating hybrid energy storage systems were proposed based on theoretical frameworks and methods. It is hoped that this review can provide some guidance and serve as a reference for developing and applying hybrid energy storage systems in industrial parks.

Keywords: industrial park energy system, hybrid energy storage, renewable energy utilization, regulation and operation, energy conservation and carbon reduction

INTRODUCTION

Background

According to China Association of Building Energy Efficiency's statistics [1], the carbon emissions of Chinese buildings during the operation stage have been rising year by year (Figure 1), reaching 2.16 billion ton CO_2 (tCO_2) in 2020, which accounts for 21.7% of the total carbon emission of the nation. If the carbon emissions of industrial energy use in industrial parks are considered, the building sector's carbon emission intensity will increase significantly. The Chinese government's "Action Plan for Carbon Dioxide Peaking Before 2030" proposed optimizing industrial parks' spatial layout and conducting energy conservation and

© The Author(s) 2023. Published by Science Press and EDP Sciences. This is an Open Access article distributed under the terms of the Creative Commons Attribution License (https://creativecommons.org/licenses/by/4.0), which permits unrestricted use, distribution, and reproduction in any medium, provided the original work is properly cited.

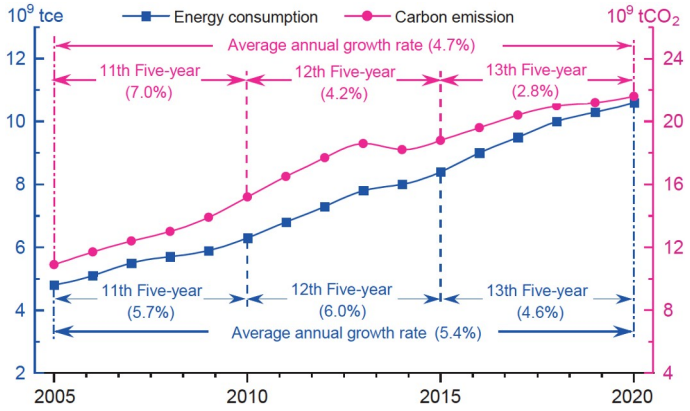

Figure 1 Primary energy consumption and carbon emissions for the building operation stage in China (2005–2020). tce: ton of standard coal equivalent.

carbon reduction transition in industrial parks to increase resource productivity and recycling. By 2030, all the key industrial parks at or above the provincial level would carry on a low-carbon recycling transition [2], because the decarbonization of industrial parks would be an important component to achieve the "carbon peaking and carbon neutrality goals" [3]. However, the renewable energy utilization rate in industrial parks is only about 30% [4], and the electricity self-sufficiency rate is less than 50% [5]. Energy consumers in industrial parks rely heavily on traditional fossil energy from sources such as the utility grid, heating pipe network, and gas network, resulting in poor energy conservation and carbon reduction, and bad reliability for energy systems in industrial parks [6,7]. Therefore, increasing the renewable energy penetration of industrial parks is a clear path to the clean, low-carbon, and efficient energy supply for industrial parks.

Energy storage is an important link between energy source and load that can help improve the utilization rate of renewable energy and realize zero energy and zero carbon goals [8–10]. However, at the industrial park scale, the proportion of renewable energy penetration on the source side is constantly increasing, the energy demand on the load side is growing sharply; at the same time, volatility on the source and load sides has been increasing. Relying only on optimizing the configuration and operation scheme of a single energy storage technology cannot handle the highly uncertain changes of energy on both the source and load sides. This is a clear indicator of the problem of insufficient flexibility of a single energy storage. This insufficient flexibility has led to difficulties in improving the renewable energy utilization level of an industrial park's energy system. Previous studies have shown that integrating hybrid energy storage systems composed of different methods of energy storage (thermal storage, electricity storage, cooling storage, etc.) into the energy supply system can increase the renewable energy penetration for the energy systems in industrial parks [11]. However, the advantages, current status, and challenges of applying hybrid energy storage systems in industrial parks have not been investigated in detail. In order to guide the future application and development of hybrid energy storage systems in industrial parks, it is necessary to conduct a comprehensive review and study on hybrid energy storage system in industrial park.

Research status

An "industrial park" refers to an industrial cluster region formed in a certain area/zone, either through

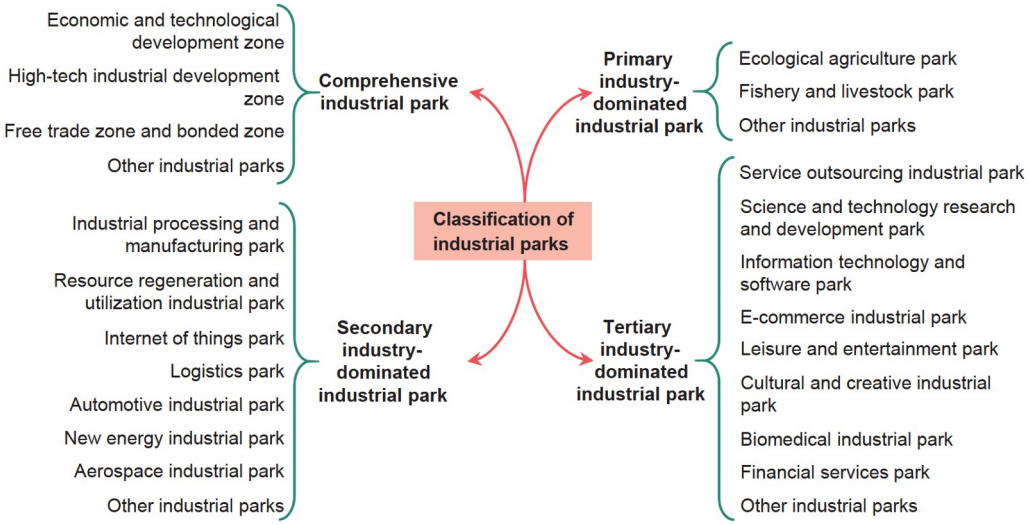

Figure 2 Classification of industrial parks.

government-led interventions or spontaneous market mechanisms [12]. Such zones are equipped with comprehensive infrastructure and a conducive development environment, concentrating enterprises that share interconnectedness and distinctive characteristics. The objective is to foster technological exchange, innovation, and regional economic growth. Different types of industrial parks are categorized and illustrated in Figure 2. Based on the summary and categorization, except for parks centered on heavy industries such as industrial manufacturing and automotive industries (secondary industries), most industrial parks have substantial areas which are suitable for the deployment of renewable energy resources (like photovoltaics, wind energy, heat pumps, etc.). Moreover, the energy produced within industrial parks may potentially meet or even exceed the load demands of users, especially on holidays and weekends, which not only pave the way for low-carbon and zero-energy operations within these parks, but also bring on the energy storage problems. In the context of global initiatives of proposing "carbon neutrality" objectives and technological trajectories, extensive renewable energy installations will be implemented around these industrial parks, leading to a pronounced unpredictability, volatility, and uncertainty to the energy supply system in industrial parks [13]. Simultaneously, with the development of society, fluctuations and complexities in cooling, heating, electricity, and gas loads on the user side will intensify within the industrial parks [14]. This results in the industrial park energy systems having significant imbalances between the source and load energies, as well as challenges like the underutilization of renewable energy resources. Heptonstall *et al*. [15] indicated in their research that at high renewable energy penetration (exceeding 40%), there was a significant energy imbalance between the energy supply side and the load demand side of industrial parks, resulting in a considerable increase in the system's energy supply costs. Guo *et al*. [16] conducted research on industrial parks under scenarios of high renewable energy penetration. Their findings showed that, in the absence of energy storage, the self-sufficiency rate and self-consumption rate of photovoltaic in industrial parks were 48.9% and 61.4%, respectively. Wu and Guo [17] indicated that when the renewable energy penetration in a certain industrial park reached 50%, 40% of the photovoltaic in that industrial park needed to be either integrated into the utility grid. Numerous studies have demonstrated that energy storage plays a pivotal role in ensuring

stable energy supply, integrating renewable energy sources, and achieving energy conservation and carbon reduction in industrial parks [18].

Energy storage has been widely used in industrial parks, but the role of a single energy storage technology in such industrial parks' is limited and cannot meet the full needs of energy storage [19]. For example, electricity storage technology has high energy quality and a wide range of applications, but also has a high unit cost and low energy density [20]. Gas storage technology is a mature technology and has a high energy density, but it has low conversion efficiencies in electrolysis and methanation processes, in addition to being relatively expensive [21]. Thermal storage technology is another mature technology that is economical, but it has a lower energy quality and cycling efficiency [22]. Hybrid energy storage systems have the advantages of better economics, carbon emissions reduction, and a high utilization level of renewable energy [23,24]. Such systems have significant advantages in terms of sustainable development, climate change mitigation, and social impact in industrial parks [7,25]. Previous studies have elucidated the role of hybrid energy storage systems in industrial parks through both qualitative and/or quantitative conclusions [26]. For instance, Sepulveda *et al*. [27] taking integrated industrial parks in New England and Texas as case studies, identified the role of long-duration storage systems comprised of various energy storage methods in power systems decarbonizing. Kittner *et al*. [28] substantiated that the deployment and innovation of energy storage, particularly hybrid energy storage, serve as crucial underpinnings for the clean transition of industrial parks and the broader energy sector. They posited that when battery storage costs descend to $ 100/kWh, renewable energy can directly compete with fossil fuels. Li *et al.* [29] indicated that, the annual total cost of industrial park energy systems incorporating hybrid energy storage was reduced by $ 7.78 million (12.61%) compared with systems with battery storage alone. Guo *et al*. [30] conducted a study on an industrial park's energy system with hybrid energy storage. Their findings revealed that, the proposed system's economic efficiency was improved by 61.14% in comparison to systems without hybrid energy storage.

However, many aspects and performance of hybrid energy storage systems in industrial parks have not yet been investigated in practice. In terms of modeling, unified time scale modeling was mainly adopts [31]. Meanwhile, previous studies have mainly focused on the energy storage capacity without focusing on the energy storage quality [14]. In terms of regulation, most previous studies have focused on "passive storage", while "active storage" combined with the advanced load prediction has been neglected [32,33]. For the aspects of design optimization, both equipment configuration and rule-based operational strategy are typically considered concurrently. This optimization design method is inadequate when the proportion of renewable energy is high at the energy supply side and the loads fluctuate sharply at the energy demand side [34,35]. In terms of optimized scheduling, most studies have adopted multi-time scale optimization of mathematical programming combined with short-term/ultra-short-term load prediction. However, linear simplification in the nonlinear models would cause the model characterization effect to be poor and large deviations from the actual situation [36,37]. In addition, few studies have put forward optimization methods and frameworks for designing and operating a hybrid energy storage system with a clear rationale behind its design [38,39].

The reasons for the aforementioned limitations in previous studies are as follows: the renewable energy power output on the energy source side and the demand side loads are characterized by great volatility, uncertainty and intermittency. Current forecasting methods are unable to accurately predict the energy demand from both the energy source and user side [40]. In order to improve the renewable energy utilization

rate and the system energy efficiency, the energy systems of industrial parks use various renewable energy utilization equipment, energy storage methods, and links to the local energy network. This complex system structure makes it challenging to model such systems [41]. Due to the energy equipment's inherent properties, the difference in response times between the cooling/heating-related "slow-response" equipment and the electrical related "fast-response" equipment is large, which make the system regulation and optimization difficult [14]. The energy storage unit cost is also relatively high, which results in obstacle to its promotion and application [42]. Therefore, more attention should be paid on the framework, modeling, regulation and optimization of hybrid energy storage systems.

In terms of system framework, there is no unified conclusion in the literature as to which energy storage methods should be chosen to construct a hybrid energy storage system [43,44]. The literature currently focused on coordinated operations between different energy storage methods. Many studies have investigated the system framework of hybrid energy storage systems and there were many typical frameworks such as power-power, cooling-heating-power, and power-heating/cooling-gas in coordinated operation [45,46]. Each typical framework has advantages and disadvantages attributed to different energy supply scenarios, optimization objectives, constraints, user preferences, etc. [47].

In terms of system modeling, different disciplines focus on different types of energy equipment. Currently, many reports in the building energy field were based on hourly energy balance constraints, focusing on thermodynamic models that characterize the operating characteristics of cooling/heating related "slow-response" equipment [48]. However, the electrical related "fast-response" devices only focus on energy balance, which could not fully characterize the system's response characteristics in a short time. Reports from the field of electrical engineering usually presented a unified model that considers the overall flow transfer and conversion process of cooling, heating, and electrical energy, and carried out analysis and modeling of "fast" and "slow" equipment [14]. However, the linear simplification of variable operating conditions for "slow-response" equipment cannot fully characterize their thermodynamic operation characteristics [46].

In terms of regulation, many studies have emphasized the differences in operational characteristics and response times between electricity storage technologies for energy-type and power-type. By integrating different electricity storage methods into the energy supply system to smooth out fluctuations of the source power, but the thermal energy storage has not been considered simultaneously [49]. Many studies have focused on the integration of various energy storage methods into the energy system in industrial parks [50]. However, the majority rely on the passive regulatory principle of "maximum self-consumption rate", without proactively considering the energy characteristics in future periods. This result may fail to fully harness the proactive storage advantages of hybrid energy storage system.

In terms of optimization, there is a mutual influence between system operation optimization and equipment configuration optimization. Previous studies usually considered three optimization methods, and mainly used collaborative [51], multi-stage, and hierarchical optimization methods [34] to obtain reliable configuration and operating status of system devices. However, current studies on hybrid energy storage system were equipment configuration and rule-based operational strategy is typically considered concurrently for optimization. This optimization method is inadequate when the proportion of renewable energy is high at the energy supply side and the loads fluctuate sharply at the energy demand side. Based on the obtained system configuration, some studies combined the short-term/ultra-short-term energy prediction method with the mathematical planning method and proposed an optimized multi-time scale operation method [36,37]. Such

analysis aimed to develop a more refined intra-day short-time scale operation scheme and ensured the reliability of the renewable energy supply. However, in most studies, many nonlinear equipment models were linearly simplified in the optimization process, and the operation optimization results were significantly different from the actual situation.

Motivation and work of this paper

Hybrid energy storage systems have the advantages of better economic benefits, energy conservation and carbon emissions reduction, and the promotion of sustainable development. Previous studies had suggested that hybrid energy storage systems were suitable for use in industrial parks. However, due to the uncertainty of energy on both the source and load sides, the complexity of the system structure, and the significant differences in equipment response times, there are no mature conclusions have been reached regarding the optimal structure, configuration, and operation of hybrid energy storage systems in industrial parks.

This paper reviewed the advantages, current status, and future challenges of study on the hybrid energy storage systems for industrial parks. Firstly, the advantages and disadvantages of common energy storage methods (such as electricity, heating, and gas energy storage) were discussed in terms of their response time, service life, economic cost, and applicability. Secondly, the advantages of hybrid energy storage systems were discussed in terms of their relation to sustainable development, climate change mitigation, and social impact in industrial parks. Then, the typical framework of a hybrid energy storage system was introduced and analyzed based on combined storages such as power-power, cooling-heating-power, and power-heating/cooling-gas. Furthermore, the research hotspots of hybrid energy storage systems in industrial park were summarized, including system modeling methods, hybrid energy storage mechanisms, and optimization of design and operation methods. In addition, the challenges of modeling, regulation and optimization of hybrid energy storage systems in industrial parks were discussed. Finally, the optimization methods and framework for designing and operating a hybrid energy storage system in an industrial park were proposed.

COMMON ENERGY STORAGE TECHNOLOGIES IN INDUSTRIAL PARKS

In order to increase the proportion of renewable energy usage in industrial parks, it is necessary to transform the energy supply mode of buildings from the centralized energy supply mode to a combined distributed and centralized energy supply mode. However, the new energy supply mode probably causes multiple mismatches in both the source and load sides and lower the utilization efficiency of renewable energy. Energy storage can effectively increase the renewable energy utilization levels and the comprehensive benefit of the industrial park's energy system [52–54]. In addition, energy storage technology also plays an important role in peak shifting and valley filling, peak and frequency regulation, stable system operation, and so on [55,56]. The commonly used energy storage technologies in industrial parks (Figure 3) were divided into electricity storage (lead-acid battery, lithium battery, supercapacitor, flywheel storage, etc.), thermal storage (thermal storage water tank, phase change material, etc.), and gas storage (natural gas storage, hydrogen storage, etc.) [57]. Each energy storage technology has different operating principles and is greatly affected by different application scenarios, resulting in huge differences in the advantages and limitations in terms of economy,

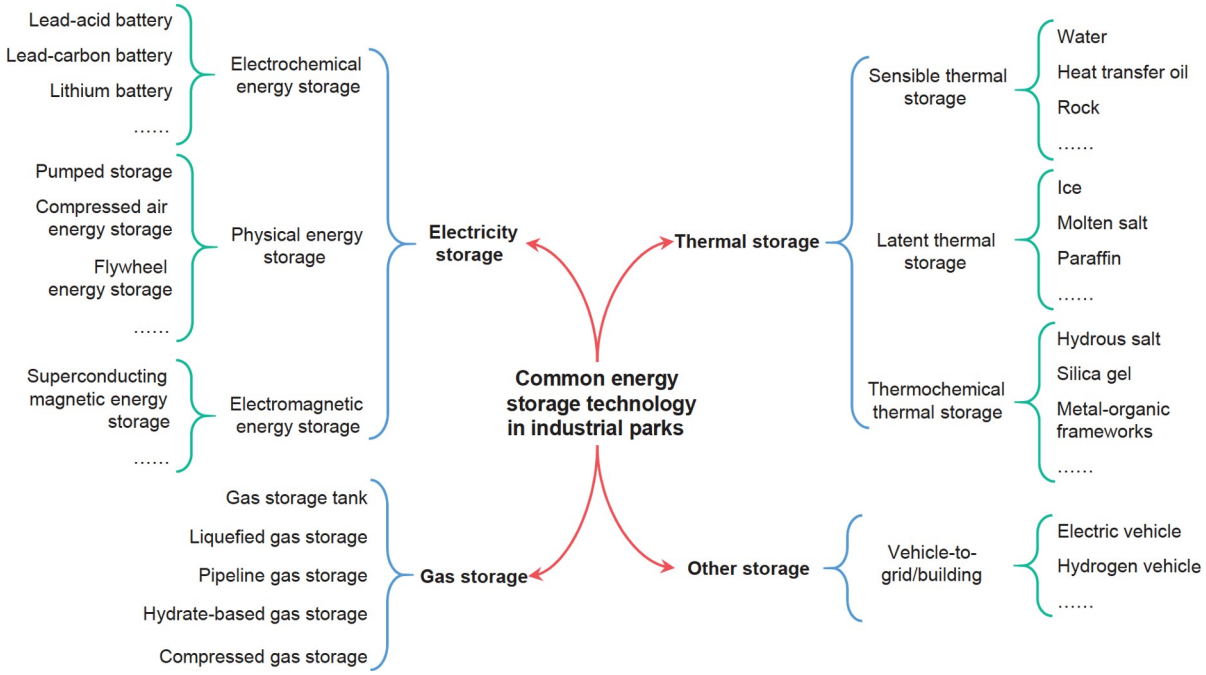

Figure 3 Common energy storage technology in industrial parks.

response time, energy storage density, etc. [58,59].

Electricity storage

Electricity storage technologies can be divided into electrochemical energy storage (lead-carbon battery, lithium battery, etc.), physical energy storage (pumped storage, compressed air energy storage, etc.), and electromagnetic energy storage (superconducting magnetic energy storage, etc.) according to the method of energy storage [60]. A performance comparison of typical electricity storage technology in terms of energy density, power density, response time, etc., is shown in Table 1 [18,61–64]. The table shows that each electricity storage technology has significant differences in energy and power density, capacity cost, response time, service life, and other aspects. For example, the supercapacitor's power density could reach up to 5000 W/kg, which is 50 times larger than that of the flow battery. The capacity cost of lead-acid batteries was about $ 60–80/kWh, while that of superconducting magnetic energy storage was greater than $ 15,000/kWh. In terms of the service life, most electrochemical energy storage technologies have a cycle number of several hundred to several thousand cycles, while pumped storage has a life span of 30 to 60 years. As for the response times, ultracapacitors and flywheel energy storage have a millisecond-level response, while the fastest response time of mechanical energy storage was at the minute level. In addition, physical energy storage technologies are featured with long service life and large-scale storage capacity, but it has strict site restrictions and the disadvantage of inefficiency [65]. Electromagnetic energy storage has the advantages of a fast response speed and large specific power, but its unit cost is expensive and it is still in the experimental stage [66]. Therefore, physical energy storage and superconducting magnetic energy storage are unsuitable for industrial park applications.

Table 1 Performance comparison of typical electricity storage methods [18,61–64]

Energy storage types		Specific energy (Wh/kg)	Specific power (W/kg)	Rated power	Energy storage efficiency (%)	Capacity cost ($/kWh)	Response time	Cycle life	Continuous charging-discharging time	Advantage	Limitations
Electrochemical energy storage	Lead-acid battery	30–50	75–300	⩽50 MW	70–80	60–80	100-millisecond level	500–1200 cycles	min-h	Mature technology, low cost	Short service life, lead contamination
	Lead-carbon battery	40–60	300–400	⩽50 MW	85–95	130–160	100-millisecond level	1000–4500 cycles	min-h	Mature technology, higher specific power	Low specific energy, lead contamination
	Sodium-sulfur battery	150–300	90–230	0.01–100 MW	80–90	350–450	100-millisecond level	2500–4500 cycles	min-h	High specific energy and power	Safety concerns, high weight and size, material degradation
	Flow battery	20–70	50–140	5 kW–100 MW	75–85	600–800	100-millisecond level	⩾12000 cycles	min-h	Long service life, can 100% charge-discharge, low environmental impact	Low specific energy and power, high cost
	Lithium battery	100–300	100–400	1 kW–100 MW	90–95	130–160	100-millisecond level	1000–5000 cycles	min-h	High specific energy and power, long lifespan	High cost, safety concerns
	Supercapacitor	5–50	500–5000	0.01–1 MW	95–98	1500–2000	Millisecond level	100,000 cycles	ms-min	Fast response, high specific power	Low specific energy, high cost
Physical energy storage	Pumped storage	0.5–2	–	10–500 MW	70–80	250–350	Minute level	30–60 years	h-d	Long lifecycle, suitable for large-scale power storage, proven technology	Slow response, geographical limitations, high initial costs, integration complexity, environmental concerns
	Compressed air energy storage	30–60	–	10–300 MW	50–70	250–350	Minute level	20–40 years	h-d	Large scale storage, long lifespan, decent round-trip efficiency	Slow response, limited by geographical resource
	Flywheel energy storage	20–80	400–1600	1 kW–1 MW	90–95	>7000	Millisecond level	2000–100,000 cycles	s-min	Rapid response time, high specific power, long lifespan	High initial costs, high noise, safety concerns, bearing wear
Electromagnetic energy storage	Superconducting magnetic energy storage	0.5–5	500–2000	0.1–10 MW	95–98	>15,000	Millisecond level	100,000 cycles	ms-s	Rapid response time, high specific power, long lifespan	High initial costs, short energy storage duration, safety concerns, large size

Electrochemical storage can be divided into energy-type and power-type according to energy density, power density, response time, and other factors. Energy-type electricity storage technologies have a high energy density and a relatively slow discharge time, mainly used in large-scale energy storage and transfer scenarios. Power-type electricity storage technologies have a high power density and high instantaneous charging/discharging power, and is mainly applied in the scenarios requiring transiently high-power charging/discharging [67,68]. Lithium batteries, which are the representative of energy-type electricity storage, can meet different requirements of power and energy supply, response speeds, and charging/discharging duration. However, energy-type electricity storage has some disadvantages, such as being incapable of charging/discharging frequently and instantaneous large-scale charging/discharging, and inability to respond to millisecond time scale grid fluctuations [69]. Supercapacitors, which are the representative of power-type electricity storage, have the features of a fast response speed, high specific power, and transient large-scale charging/discharging. However, some disadvantages exist such as high unit cost, short duration of charging/discharging, and low energy density [67,70].

To sum up, a single electricity storage technology cannot simultaneously meet the reliability, stability, and economic requirements of the energy systems in industrial parks, thus it was necessary to combine the advantages of both the power-type and the energy-type electricity storage to improve the renewable energy utilization rate in industrial parks.

Thermal storage

According to the energy storage mechanism and materials, thermal energy storage technologies can be divided into sensible, latent, and thermochemical thermal storage [71]. Thermochemical thermal storage is still mainly in the experimental development stage with few commercial applications [22,72], hence is not discussed in this study. Compared with electricity storage technologies, thermal storage technologies are characterized with technical maturity, low cost, long equipment lifetime, environmental protection, and no pollution. This technology could effectively store excess heat in industrial parks and supply heating or cooling to users when needed [16,73,74]. However, the energy quality of low-moderate temperature thermal energy is relatively low, the conversion efficiency is low for absorption heat pumps, and the high-temperature thermal to electricity conversion is also limited by the Carnot cycle. The energy quality of thermal storage is low, which can only meet the users' cooling or heating load demand and cannot be converted into other types of energy. In addition, there are low cycle efficiency and heating loss problems for thermal storage systems [75].

To be specific, sensible heating storage is mainly used to store/release energy by using the heat capacity of the materials' temperature difference during the cycle. The stored heating capacity is proportional to the density, specific heat, volume, and temperature variation of the stored materials [76]. The storage system performance mainly depends on the density and specific heat of the materials used, which leads to a large volume of the energy storage system, and thus results in the high space required and associated costs, in addition to significant thermal losses [77]. Latent heating storage (e.g., iced storage, phase change material) takes full advantage of the phase transition enthalpy of phase change materials, thus the energy storage density is higher and the required storage space is lower than those of sensible storages. In addition, latent heating storage is also limited by the phase change material's properties, such as low thermal conductivity,

supercooling, phase separation, and other problems [78,79].

The technical characteristics of commonly used commercial thermal storage materials are shown in Table 2 [78,80–83]. Water is the most commonly used thermal energy storage medium due to its merits of economical, accessible, environmentally friendly, and chemically stable. In recent years, researchers have focused more on phase change materials (PCMs) due to their high thermal storage density and relatively low price. At present, high-temperature thermal storage is a research hotspot, for example using molten salt heat storage in power generation.

To sum up, thermal energy storage technologies have the advantages of being economical, environmentally friendly, capable of large-scale storage, and long service life. However, it has some limitations such as low energy quality, large energy loss, low efficiency, and inability to be converted into other forms of energy. When users mainly need cooling or heating energy, they can directly use solar heat collection technology to collect heat, or power-to-heating/cooling technology to convert electrical energy into heating/cooling, and use thermal storage equipment for storage to improve the energy supply's economy and reliability in industrial parks.

Gas storage

The gas load demand of industrial parks is met by natural gas and/or hydrogen. On the one hand, the users could purchase gas from the outside to meet the gas load demand. At the same time, the surplus power generation from renewable energy sources could be used for water electrolysis or methanation to generate hydrogen and/or natural gas [84–86]. Gas storage facilities can effectively alleviate the mismatch between the gas supply and gas used in industrial parks. Gas storage technology in industrial parks includes gas storage tanks, liquefied gas, pipelines, hydrates, compressed gas, and other gas storage methods [87,88]. Pipeline gas storage uses the pressure and volume variation at the user end to store natural gas. It took the advantage of the gas storage and also has the advantage of being economical, and is one of the most commonly used gas storage technologies [89].

Using power-to-gas technology to convert excess electricity generated by PV systems and wind power into hydrogen or methane for storage in gas storage equipment, exploits high energy density and long-distance transportation capability of gas storage. At the same time, gas storage facilities can be used for long-term seasonal storage, effectively alleviating the long-term mismatch problem between renewable energy generation and users' energy consumption [84,90]. However, the process efficiency is lower for electrolyzing water [91] (60%–80%) and methanation [92] (60%–80%), and there is a large energy loss when hydrogen or methane is reconverted into other types of energy [93].

Other storage technologies

In recent years, there is more attention focused on load flexibility and vehicle-to-grid/building (V2G/B) as generalized energy storage technologies. Load flexibility is defined as the ability of a building to promote the energy balance between supply and demand by changing its operating power or operating time to adapt to weather conditions, user needs, or energy system requirements without compromising the users' interests [94]. Load flexibility regarding to grid demand response and auxiliary services can effectively alleviate the

Table 2 Technical characteristics of commonly used commercial thermal storage materials [78,80–83]

Thermal storage materials		Working temperature range (°C)	Density (kg/m^3)	Specific heat (kJ/(kg K))	Thermal conductivity (W/(m K))	Material cost ($/kg)	Advantages	Limitations
Sensible thermal	Water	20–80	1000	4.2	0.60	0.005	Economical, easy access, environmentally friendly, stable	Low thermal storage density, narrow range of heating source, large heating loss
	Heat transfer oil	−40–300	800–900	1.5–2.0	0.15–0.30	1.2–10	High heat transfer efficiency, easy-to-control temperature, non-corrosive	High price, flammable, easy to decompose
	Rock	100–1000	1500–2800	0.9–1.1	0.85–3.50	0.02–0.3	Economical, good thermal stability	Low thermal efficiency, need a heat transfer medium, poor cycle stability, high heating loss
	Concrete	200–400	2000–2500	0.8–1.0	1.0–2.0	1.2–10	Wide range of usage temperatures, high strength	High cost, need a heat transfer medium
Latent thermal	Ice	<0	917	2.1	2.2	0.05	Economical, easy access, environmentally friendly, strong stability	Volume change is relatively large, low thermal storage density
	Molten salt	300–850	1800–2100	1.5–1.8	0.60–0.08	0.5–3.0	Good heat transfer, high heating storage density	Solidifies easily, corrosive, toxic
	Hydrous salt	30–80	1100–1500	1.5–2.0	0.50–0.6	0.2–1.5	High thermal conductivity, little change in phase transition volume, low cost	Supercooling phenomenon, corrosion, decomposition
	Paraffin	20–40	800–950	2.1–2.9	0.20–0.30	1.0–3.0	High latent heating, stable chemical properties	Low efficiency, poor thermal conductivity, large volume change, flammable
	Polyethylene glycol	15–45	1000–1300	2.1–3.1	0.10–0.20	1.0–3.0	High latent heating, compatible with other materials, recyclable, stable chemical properties	Low efficiency, low thermal conductivity, large volume change, flammable

impact of high penetration of distributed renewable energy [95,96]. Compared with traditional energy storage technologies, load flexibility requires no additional investment and is more economical and feasible in industrial parks. Employing load flexibility techniques by synergistically coordinating transferable, shiftable, interruptible, and curtailable loads is capable of swiftly respond to utility grid events and renewable energy utilization signals, consequently elevating the holistic benefits of industrial parks [97]. A generalized hybrid energy storage system, which is constituted by flexible loads and traditional energy storage methods, can reduce the capacity requirements of traditional energy storages, thereby enhancing the economic efficiency of the system [98]. However, the development and promotion of load flexibility technology in industrial parks face considerably challenges, including the low accuracy in predicting user-adjustable potential, limited frequency of user participation, difficulties in large-scale user regulation, and poor reliability of adjustments [99,100].

The primary objective of V2G/B is to improve the utilization level of renewable energy and peak-shifting and valley-filling for the utility grid through the interaction between electric vehicles and the grid or buildings [101]. Essentially, a certain number of electric vehicles can function as storage units to alleviate the imbalances and mismatches between renewable energy generation and electricity consumption in the utility grid or buildings [102–104]. V2G/B has advantages such as economic benefits, peak-shifting and valley-filling, enhanced utilization of renewable energy, and a reduction in infrastructure investment [105,106]. Some studies integrated electric vehicles as mobile energy storage into hybrid storage systems to address the challenge of high initial investments of electricity storage [107]. Another research focal point involves utilizing hydrogen vehicles to harness the excess renewable energy in industrial parks, thereby enhancing renewable energy utilization levels, reducing the system investment and operational costs, and decreasing primary energy consumptions and carbon emissions [108]. At the same time, V2G/B faces challenges such as difficulties in coordinating resources, and low willingness of vehicle owners to participate [109,110]. In addition, previous studies mainly focused on theoretical frameworks with few reports referring to experiments.

Electricity storage technologies have high energy quality and can convert stored electricity into various types of energy. Their application potential is vast. However, these technologies still have some shortcomings, such as low energy density, high unit cost, and inherent security risks. Gas storage technology is well-established, possessing advantages such as high energy density, extended storage duration, and long transportation ranges. However, the power-to-gas conversion process encounters challenges such as low energy conversion efficiency, high equipment costs, and insufficient technological maturity. Thermal energy storage technologies have the advantages of being mature, economical, environmentally friendly, and having a long equipment service life. However, thermal energy storage technologies also have limitations such as low energy quality, high heating loss, and low cycle efficiency.

In summary, each energy storage technique has obvious advantages and disadvantages, and their role in industrial parks is limited as they cannot meet the industrial park users' full needs. Hybrid energy storage holds promise in facilitating energy transitions in industrial parks, advancing sustainable development, mitigating climate change, and delivering significant societal benefits. Therefore, it is necessary to carry out further research on hybrid energy storage systems to leverage the advantages of different energy storage technologies, improving the renewable energy utilization level of industrial parks.

ADVANTAGES AND TYPICAL FRAMEWORK OF HYBRID ENERGY STORAGE SYSTEMS

Advantages of hybrid energy storage

Hybrid energy storage systems play a pivotal role in the advancement of renewable energy within industrial parks. In the context of China's goals for carbon peaking and carbon neutrality, the prospects of hybrid energy storage development are promising. Several studies have indicated that hybrid energy storage systems exhibit significant advantages in areas such as economic benefits, energy conservation and carbon reduction, quality of energy supply, peak shifting and valley filling, and utilization of renewable energy.

(1) **Economic benefits** Hybrid energy storage can stabilize imbalances of instantaneous electric power and large electric quantity on both the energy supply side and load demand sides through power-type and energy-type electricity storage equipment, respectively [20,24]. The combination of energy-type and power-type electricity storage effectively reduces the initial investment costs associated with electricity storage devices [111]. At the same time, hybrid energy storage systems can prevent frequent start-stop cycles and transient large-scale charging and discharging of energy-type storage devices, thereby extending their service life and enhancing the economic efficiency of the industrial park's energy system [112,113]. By combining the "active storage" strategy of energy storage with advanced load forecasting techniques, the operation of diversified energy storage systems can be optimized, improving the economic benefits of the hybrid energy storage system [114].

(2) **Energy conservation and carbon reduction** Integrating industrial park energy systems with hybrid energy storage can further improve the utilization level of local renewable energy and industrial waste heat, realizing efficient and clean cascade utilization [26]. Additionally, hybrid energy storage can effectively improve the local energy utilization rate, diminishing the losses in electricity and heat during transmission, which in turn reduces the primary energy consumption and carbon emissions of the energy system [41,115]. According to preliminary studies on hybrid energy storage, the energy-saving rate and carbon reduction rate of the industrial park energy system with hybrid energy storages were above 40% and 50%, respectively, compared to the separated production system [116]. Hybrid energy storage system can significantly contribute to energy conservation and carbon reduction in both building and industrial sectors [117,118].

(3) **Technological complementarity** Each energy storage method possesses its unique advantages and limitations [119]. For instance, supercapacitors boast high power density and rapid response times, but they come with higher costs and lower energy density [120]. Thermal storage is cost-effective and technologically mature, but the quality of stored energy is lower, and it suffers from reduced cycle efficiency [121]. Hybrid energy storage systems can harness the strengths of different energy storage methods, facilitating a more efficient and comprehensive energy management in industrial parks [122].

(4) **Meeting varied load demands in the industrial park** Industrial parks typically require a variety of load demands including cooling, heating, electricity, and gas [123]. Hybrid energy storage systems can better satisfy the multifaceted load needs of the industrial park, enhancing the reliability of energy supply and user satisfaction in energy consumption [124,125].

(5) **Prolonging energy storage lifespan** Through judicious management of hybrid energy storage systems, one can effectively avert over-reliance on any single energy storage technology, thereby extending the overall lifespan of the system [126–128]. For instance, by coordinating lithium batteries with super-

capacitors, the frequent start-stop cycles and instantaneous high-power charging and discharging of the lithium batteries can be mitigated, prolonging their operation life [129,130].

(6) **Peak-shifting and valley-filling** The pressure to shift peaks of the energy system has been escalating in industrial parks due to the high renewable energy penetration and the continuously widening peak-valley difference in user load demand [112]. Hybrid energy storage store electricity during periods of price valleys or peak of renewable energy generation and releases energy for users during periods of peak energy consumption, thereby improving the operation flexibility of the energy system [119].

(7) **Better adaptation to renewable energy** Since the supply of renewable energy resources, such as wind and sunlight, is volatile and user loads are relatively uncertain and intermittent, there exists a low utilization rate of renewable energy in industrial parks [19]. Hybrid energy storage systems utilize both energy-type and power-type electricity storage to balance out discrepancies between supply and demand sides [31]. They convert renewable energy generation into thermal energy (cooling/heating) using power-to-cooling/heating technologies and store it [68]. During periods of peak user demand, the stored energy by hybrid energy storage systems is released to alleviate imbalances between supply and demand, thereby improving the renewable energy utilization rate [131]. Additionally, hybrid energy storage systems can use thermal storage technology to store excess heat collected by solar thermal collectors, supplying it when users require a cooling/heating load, and thus enhancing the energy utilization rate of the solar thermal collectors [132,133].

Typical framework of hybrid energy storage

Regarding the hybrid energy storage system structure, there is no unified conclusion on which energy storage methods to use, but power-power, cooling-heating-power, and power-heating-gas storage methods are focuses of current research. There are many typical hybrid energy storage structures that have been highlighted in the literature. Each typical structure has advantages and disadvantages, mainly resulting from different energy supply scenarios, optimization objectives, etc.

Power-power hybrid energy storage system

Current research is heavily centered on integrating various electricity storage methods within the energy systems of industrial parks. Numerous reports have investigated this topic, considering the transient power discrepancies between the source and load sides. They allocate low-frequency power components to energy-type electricity storage and high-frequency power components to power-type electricity storage. Commonly used power-power combined storage methods include supercapacitor-storage systems, supercapacitor-compressed air energy storages, lithium battery-compressed air energy storages, and supercapacitor-lithium battery-compressed air energy storages, etc. [90,134–136]. By coupling different electricity storage methods to amalgamate their advantages, such as mitigate energy fluctuations on both the energy source and load sides, extend the lifespan of energy storage, and improve operational efficiency, the renewable energy utilization can be enhanced [137].

The supercapacitor-storage battery system has a short response time. It can avoid frequent start-stop operations and transient large-scale charging/discharging for the storage battery, prolong the battery's service life, and is suitable for small to medium-sized electricity storage [138]. The supercapacitor in supercapacitor-

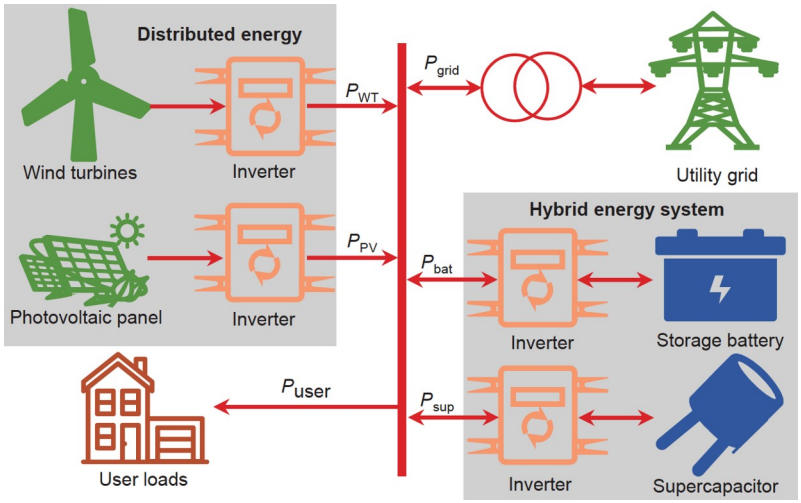

Figure 4 Schematic diagram of power-power hybrid energy storage.

compressed air energy storage can quickly counteract the unbalanced electrical power of the source and load sides and use compressed air energy storage to store electricity on a large scale at a reduced cost. However, it is primarily suitable for large-scale electricity storage [139]. Lithium battery-compressed air energy storage boasts a high safety factor and a relatively low cost, but with a longer response time and reduced lithium battery service life [140]. The supercapacitor-lithium battery-compressed air energy storage can harness the advantages of each method and is suitable for large-scale electricity storage, but requires large initial investment and has control difficulties [141]. Moreover, some studies consider electric vehicles [142] and load flexibility [143] as novel electricity storage methods for constructing the energy system, aiming to boost the system's economic benefits, energy-saving, and carbon reduction. However, challenges arise in coordinating various stakeholders' interests and controlling the system.

Representing a typical power-power collaboration storage method, the supercapacitor-storage battery combination (as depicted in Figure 4) offers advantages such as a short response time, extended charging/discharging duration, enhanced overall benefits of the energy system, and is well-suited for industrial parks. Wind power and photovoltaics convert renewable energy into electricity to supply the electric load to users. The storage battery and ultracapacitor are strategically utilized to stabilize the imbalances in power between the source and load sides, with the storage battery addressing low-frequency fluctuations and the ultracapacitor handling high-frequency variations. Furthermore, the utility grid serves as a backup power source when power of the hybrid energy storage is insufficient or to utilize excess renewable energy generation. However, many power-power collaboration storage studies typically neglect other energy storage methods or the supply and regulation of heating and cooling loads in industrial parks.

Cooling-heating-power hybrid energy storage system

Numerous studies have explored hybrid energy storage systems that combine electrical with thermal (both heating and cooling) energy storage. Research on this type of hybrid energy storage primarily encompasses cooling-heating storage, cooling-power storage, heating-power storage, and cooling-heating-power storage.

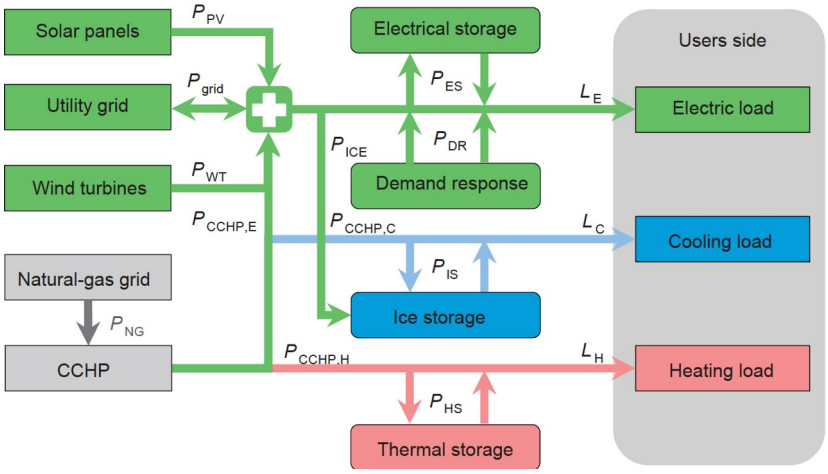

Figure 5 Typical framework of cooling-heating-power hybrid energy storage system [151].

The main objective of these studies has been to meet users' cooling, heating, and electricity demands, while enhancing the industrial park's renewable energy utilization rate, economic feasibility, energy conservation, and carbon emissions reduction [45,46].

Cooling-heating storage is employed for cooling storage in the summer and heating storage in the winter, aiming to enhance the utilization of solar thermal energy and the overall benefits of energy systems in parks. It is best suited for scenarios with significant demands for both cooling and heating [30]. Cooling-power storage utilizes cooling and electricity storage to store excess cooling and electrical energy, respectively, realizing spatiotemporal energy transfer and improve the matching of energy source and load demand, which is appropriate for regions with substantial demands for cooling and electricity, especially in areas with hot summers and warm winters [144]. Heating-power storage uses heating storage in the winter and electricity storage in the year-round, to improve the utilization scale of system's renewable energies and efficiency of industrial waste heat utilization. It is typically applied in cold or severe cold regions, the main demands are heating and electricity [145].

Cooling-heating-power storage uses cooling storage in the summer, heating storage in the winter, and electricity storage in the year-round. It leverages the combined advantages of various energy storage methods, thereby reducing system operation and maintenance costs while enhancing the system's energy conservation and environmental friendliness [146]. Addressing the inherent high costs of electricity storage, some studies have proposed power-to-heat [147] and power-to-cool [148] technologies based on combined cooling, heating, and electricity energy storage, to convert electricity into heating and cooling for storage. This enhances renewable energy utilization and reduces overall system costs. Additionally, certain reports have integrated electric vehicles [149] and demand side response [150] as novel energy storage techniques, merging them with traditional energy storage approaches to craft hybrid energy storage systems. Findings indicated that electric vehicles and demand-side responses could effectively decrease the capacity required by traditional energy storage methods and enhance the overall efficiency of the hybrid energy storage system.

The typical framework of the cooling-heating-power energy storage system is shown in Figure 5 [151]. The system prioritizes utilizing photovoltaic and wind power generation to supply users with electric loads. Surplus electricity, cooling, and heating from the system are stored in electrical, ice, and heat storage units

respectively, and are released upon user demand. The utility grids and cogeneration systems serve to make up for any deficiencies in the electric load of the system. Furthermore, such systems often incorporate virtual power plants or demand-side response technologies on the user side to maximize the use of renewable energy sources. However, a majority of these studies mainly focus on "passive storage", which does not merge hybrid energy storage with forecasts of renewable energy generation and user energy demand, resulting in suboptimal allocation and storage of electricity, heating, and cooling energies.

Power-cooling/heating-gas hybrid energy storage system

Investigations into hybrid energy storage combining power-cooling/heating-gas storage (especially hydrogen) have been widely reported [21]. This type of energy system takes full advantages of the benefits of hydrogen storage, which include high energy density, long storage time, and long transportation distance, and combines them with electricity and heating energy storage to form a hybrid energy storage system [43,152,153]. Reference [154] constructed an industrial park energy system that coupled electricity storage, thermal storage, hydrogen storage, and fuel cells. The research results indicated that renewable energy generation could satisfy 35%–49% of the park's electricity demand. Reference [155] introduced an industrial park energy system that integrated battery storage, hydrogen storage, and gas turbines. This system was found to reduce carbon emissions by 37.2% by providing hydrogen fuel to the gas turbine. Reference [156] took two tropical cities as energy supply scenarios, and the results demonstrated that the combined electricity, hydrogen, and cooling storage technologies could effectively reduce system costs. Reference [157] compared industrial park energy systems with and without hydrogen, electrical, and heating storage technology, and the findings revealed that adding hybrid energy storage decreased the system's energy supply cost by $ 0.0207/kWh. In conclusion, the hybrid energy storage comprising power-cooling/heating-gas can enhance renewable energy utilization, reduce carbon emissions, and lower operational costs in industrial parks.

The typical schematic diagram for power-heating/cooling-gas energy storage is shown in Figure 6. Renewable energy generation is prioritized to meet users' electric load. Excess electrical energy is partly stored in batteries, while the rest is converted into hydrogen or methane through power-to-gas technologies and supplied to the municipal gas grid and/or stored in gas storage tanks. Shortfalls in the electric load are sequentially compensated by batteries, gas turbines, and utility grid. Heating load is jointly supplied by air-source heat pumps, waste heat recovery from gas turbines, and thermal storage tanks. The gas load is provided jointly by the gas storage tank and the municipal gas network. This system type can effectively meet the diverse load demands and renewable energy utilization at the industrial park level. However, there are also problems such as the complex system structure and the difficulties of system modeling, optimization, and control.

In addition to the three typical hybrid energy storage methods, which are power-power, cooling-heating-power, and power-cooling/heating-gas storage, there are also power-gas (Figure 7) [158] and gas-gas storage [159–161].

The current proposed hybrid energy storage system can significantly improve the renewable energy utilization, but there are several pressing challenges remain. For instance, while much effort has addressed the power imbalance between the source and load sides through the use of power-power combined storage, many studies often neglect the simultaneous storage of heating and cooling energies. Thus, the advantages of

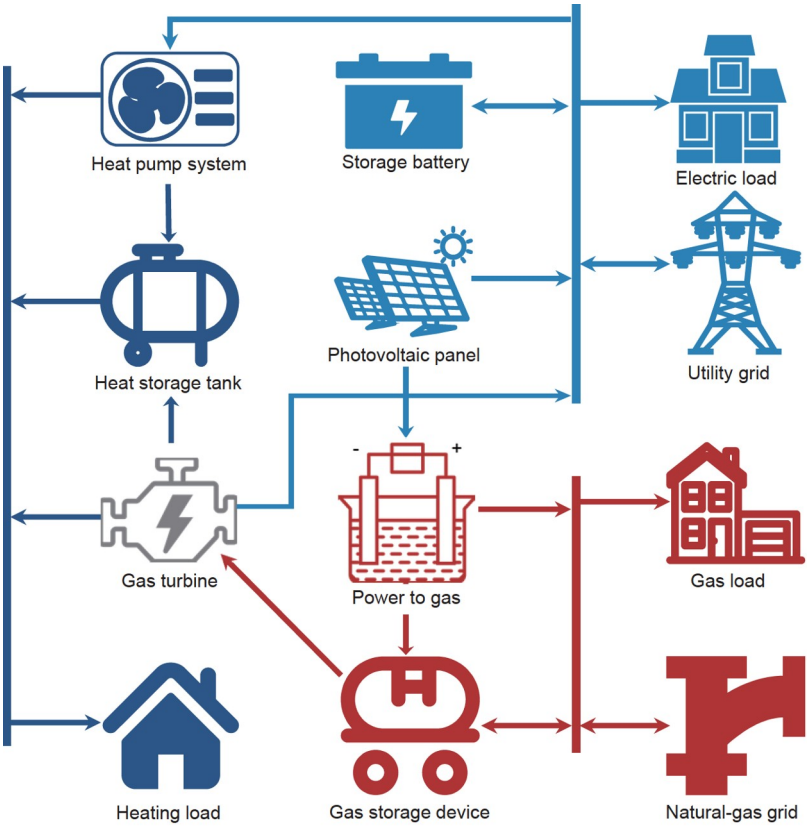

Figure 6 Schematic diagram of a power-cooling/heating-gas hybrid storage system.

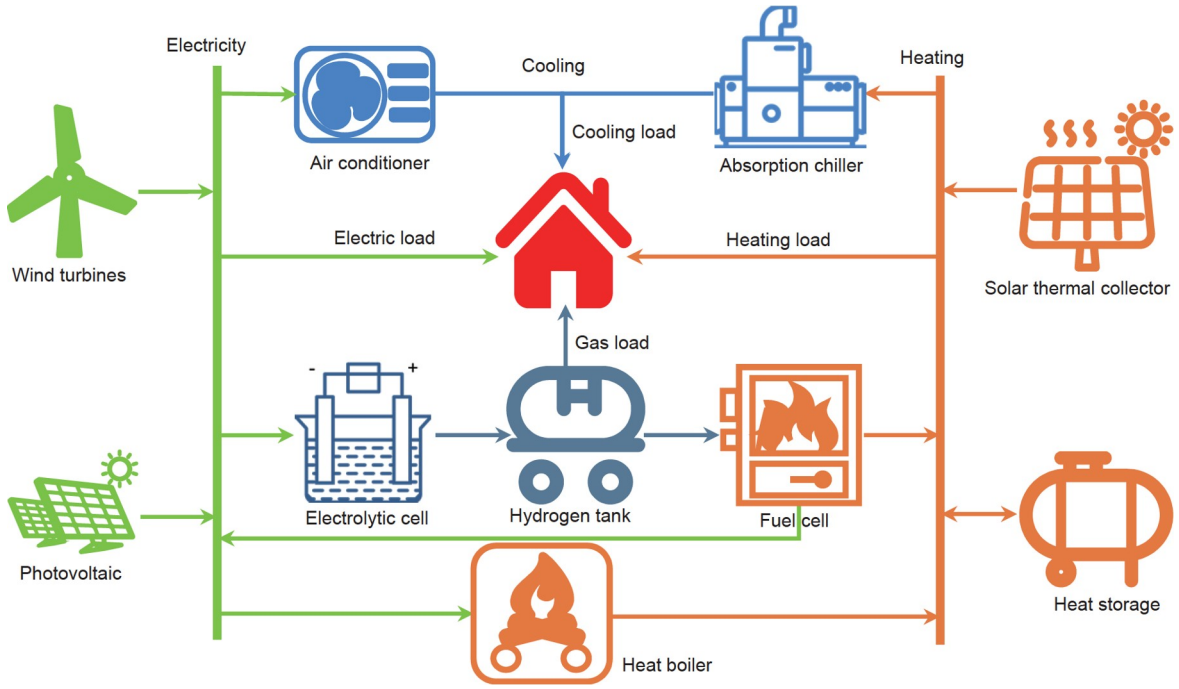

Figure 7 Typical framework of a hybrid power-gas storage system [158].

hybrid energy storage in utilizing renewable energy sources have not been fully realized. Cooling-heating-power storage systems can effectively utilize various renewable energy resources and satisfy varied user load demands. However, this storage approach is predominantly passive, failing to integrate hybrid energy storage with forecasts of energy demand on the load side. The power-heating/cooling-gas hybrid storage boasts the high energy density of hydrogen or methane and its ease of storage, but there are disadvantages such as system complexity, modeling complexity, and poor economic performance.

To fully realize the application potential of hybrid energy storage systems in industrial parks, it is necessary to conduct optimization design and operation scheduling research. In the design and planning phase, it is essential to obtain data on renewable energy generation and user energy demand within the industrial park for a typical year. Utilizing a layered optimization approach integrating integrates artificial intelligence and mathematical programming, an optimal design solution for hybrid energy storage system is formulated, with the concurrently considering both equipment configuration and system operation optimization. In the operational control phase, an artificial intelligence-based energy forecasting model is established to predict short-term/ultra-short-term renewable energy generation and user load profiles in industrial parks. This forecasted data serve as the foundation, leading to the establishment of a detailed optimization model for the hybrid energy storage system. Employing an optimization method that integrated artificial intelligence and model predictive control, the hybrid energy storage system undergoes dynamic performance optimization. Through a two-phase optimization of design planning and operational control, the maximal potential of hybrid energy storage systems in industrial parks can be realized. Finally, issues such as the energy imbalances between energy supply side and user demand side and the underutilization of renewable energy resources in industrial parks are effectively addressed.

CURRENT RESEARCH HOTSPOTS AND CHALLENGES

This section summarized the research hotspots of hybrid energy storage systems for industrial parks, focusing on modeling methods, hybrid energy storage mechanisms and more, and also discussed the challenges of hybrid energy storage, particularly in modeling, regulation, and optimization. Furthermore, from a theoretical standpoint, optimization methods and processes for designing and operating hybrid energy storage systems were proposed.

Modeling methods for hybrid energy storage system

The construction of a simple, reliable, and robust hybrid energy storage system serves as the theoretical basis for research on system configuration and operational optimization [14]. However, the hybrid energy storage system is significantly influenced by the response times of devices, including those renewable energy utilization and energy storage equipment. Simultaneously, the hybrid energy storage system comprises devices for energy production, storage, and consumption, presenting considerable challenges for the system's modeling process. In current research, based on the characteristics of cooling, heating, and electrical energy, as well as the specific response times of equipment, energy devices can be categorized into thermally related slow-response devices (such as heating storage tank and chilled water storage) and electrically related fast-

response devices (such as ultracapacitors and batteries). Different academic disciplines place emphasis on distinct types of energy devices, undertaking a series of modeling-related endeavors.

Currently, most reports within the building energy field are based on hourly energy balance constraints, emphasizing the establishment of thermodynamic models that characterize the operational features of related slow-response devices [48]. For cooling and heating transmission networks, modeling is typically conducted separately through the formulation of differential equations, and establishing hydraulic and thermodynamic models [162]. To account for the dynamic nature of storage equipment within the hybrid energy system, some studies have expanded on the general models mentioned earlier. A detailed thermodynamic model of the hybrid energy storage system is established, considering the start-stop and operational adjustments of related slow-response devices, the dissipation and cycling losses of thermal storage, and the transmission delays and dissipation in both cooling and heating distribution networks [163,164]. However, for electrically related fast-response devices, such as storage batteries and ultracapacitors, the primary focus often lies on metrics like energy input (or output), load rates, or state of charge. There is limited consideration given to variations in electrical parameters, such as response time, current, voltage, and frequency. As a result, the constructed hybrid energy storage model may not fully capture the rapid intrinsic characteristic changes and swift response features of these devices.

Electrical engineering studies typically establish unified models that comprehensively consider the transfer, conversion, and storage processes of heterogeneous energy flows in cooling, heating, and electricity. Eladl *et al*. [165] first introduced a modeling approach based on the energy hub concept. The energy hub concept offers a mathematically model of the energy transfer, conversion, and storage process in the equipment and network, significantly simplifying the model's complexity and its computational challenges. In recent years, the energy hub concept has gained widespread application in modeling complex energy systems [166]. However, the energy hub model and its derived related models apply a linear simplification to the energy transfer, conversion, and storage processes of devices and networks. Moreover, these models predominantly focus on steady-state system analysis [167], which means they might not accurately depict the operational principles of devices, across all operational conditions. To comprehensively consider the operational patterns of hybrid energy storage during their transfer, conversion, and storage processes, several studies have proposed a range of models. These include a generalized circuit analysis model for multi-energy networks in matrix form ref. [168], a universal energy flow matrix model inspired by graph theory [169], a unified energy path model grounded in Ohm's Law and Kirchhoff's Laws [170], a comprehensive thermoelectric energy transport model [150], and a time-varying equivalent model for energy networks [171]. These models employ the concept of an electrical circuit analogy, analogizing the transfer, conversion, and storage processes of thermal and cooling energies to the flow of electrical charge through electrical components. This enables a unified analysis and modeling of both "fast" and "slow" response devices, thus facilitating integrated planning for hybrid energy storage systems. However, these modeling methods linearly simplify the variable working condition patterns of slow-response devices and fail to fully characterize their thermodynamic operational properties.

In summary, due to differing emphases across academic fields, existing hybrid energy storage system models struggle to comprehensively characterize the operational attributes of both "fast" and "slow" response devices on their respective time scales. Moreover, current modeling studies for hybrid energy storage systems primarily focus on storage capacity, with little attention given to the quality of energy stored using

various methods. Additionally, the majority of existing literature predominantly explores hybrid energy storage's utilization of source-side energy, with minimal research examining the impact of multiple energy demands on the user side on energy storage method selection and capacity allocation.

Hybrid energy storage mechanisms

For hybrid energy storage mechanisms in industrial parks, the primary focus is on comprehensively coordinating power-type energy storage, energy-type energy storage, heating energy storage and cooling energy storage operational methods, to realize the rational allocation of cooling, heating and electric loads for different energy storage methods. Notably, research on the power response optimization of various electricity energy storage methods is currently a hot topic in the field of hybrid energy storage system [172]. For the power response optimization issue concerning various electricity storage methods, existing literature typically considers the instantaneous power difference between the source and load. The low-frequency component is allocated to energy-type electricity storage, while the high-frequency component is designated for power-type electricity storage. Commonly used frequency separation methods include moving average filtering, low-pass filtering, fuzzy control, and smoothing power target decomposition [173].

The moving average filtering method [174] has a good inhibition effect on periodic interference and high smoothness and is suitable in high-frequency oscillation systems, but it has a low sensitivity. The low-pass filtering method [175,176], currently the most commonly used power allocation method, can quickly divide fluctuating power into high-frequency and low-frequency components. However, it cannot simultaneously consider the control sensitivity and the filtering results stability. The fuzzy control method [177,178] simplifies the system design complexity and is applicable to nonlinear, time-varying, time-delayed, and incomplete model system control, but it demands significant calculation complexity and is prone to resulting in unreasonable power allocation. The smoothing power target decomposition method [179] can ensure the energy storage system operation's economic performance, but the computational costs are high and optimization is difficult. Many studies have focused on electric power utilization of source and load sides in different electricity storage methods, but thermal and cooling energy storages have not been considered simultaneously. Utilizing electrical power in various energy storage methods, a substantial amount of research has been conducted as mentioned above. However, these studies have not simultaneously taken into account the storage of both cooling and heating energy.

Currently, some researchers are integrating various energy storage methods (such as electricity storage, thermal storage, and cooling storage) into hybrid energy storage systems for research. However, the huge differences in response time, energy density, and duration among different energy storage methods make the operation and control of hybrid energy storage systems challenging. Typical operational strategies are based on different objective functions, such as hourly optimization [50], optimization for maximum renewable energy utilization [180], and time-of-use electricity price optimization [181], to achieve adaptive optimization on an hourly basis. Moreover, considering the high cost of electricity storage units, some reports propose new operating methods like power-to-cool [182] and power-to-heat [183] to convert electrical energy into cooling/heating energy for storage, aiming to enhance the economic benefits of hybrid energy storage system. However, much of the literature advocates for optimizing electricity storage, thermal storage, and cooling storage based on the passive control principle of "maximum self-consumption rate", directing

energy into the hybrid energy storage system.

However, in the process of optimizing electrical and thermal energy storage, most studies rely on the "maximum self-consumption rate" passive regulation principle, and load allocation is carried out for different energy storage methods. In addition, the hybrid energy storage load allocation is usually carried out by only considering the energy demand at the source and load sides at the present moment, without considering the energy demand characteristics in the future. As a result, some benefits of active cooperative storage in hybrid energy storage systems, such as peak-shaving and valley-filling, as well as increased renewable energy utilization, are not fully realized.

Hybrid energy storage optimization design research

Hybrid energy storage systems are composed of various energy storage methods, various renewable energy utilization technologies, etc. There is a need for optimization studies the hybrid energy storage system to enhance the overall benefits of the system [184]. The current optimization research usually considers both configuration and operation parameters of the hybrid energy storage system. There are mainly three solution methods that have been adopted: (1) carrying out a collaborative optimization of operating and configuration parameters [185]; (2) first optimizing the equipment configuration, and then the operation parameters in a multi-stage optimization [186]; (3) carrying out layered optimization based on different types of parameters [34].

Among them, the collaborative optimization method establishes a linear or nonlinear programming model for the hybrid energy storage system. It employs mathematical programming (such as linear programming [187], mixed-integer linear programming [188,189], etc.) or heuristic algorithms (such as the ant colony algorithm [190] and the multi-objective genetic algorithm [16], etc.) as optimization tools to determine the hourly power output of hybrid energy storage system. When the hybrid energy storage system is overly complex and has many optimization variables, the collaborative optimization method tends to have poor convergence, and may fall into local optimal solutions [191]. The multi-stage optimization method splits the optimization variables in the hybrid energy storage system, adopting a strategy of optimizing system configuration parameters first and then optimizing device operation scheduling. The multi-stage optimization method addresses the poor convergence and tendency of collaborative optimization methods to fall into local optima. However, the multi-stage optimization method has issues such as the dependency of the operational stage on the configuration stage of energy storage and a division between the configuration and operational stage [192].

The multi-layer optimization method often takes the upper layer as the hybrid energy storage system configuration layer and the middle or under layer as the operation scheduling layer of energy storage. It uses inter-layer iteration to determine the type, capacity, and operating scheme of the hybrid energy storage system [34,35]. The multi-layer optimization method has advantages such as fast computation speed, good global performance, strong stability, and accurate and reliable optimization results [193]. For instance, ref. [194] employed a two-layer optimization method to optimize the hybrid energy storage system. The upper layer optimized the energy storage capacity, while the under layer refined the operational scheme of the system. The results demonstrated that the system's economic and energy benefits were significantly improved. Reference [195] utilized a genetic algorithm to undertake a two-layer coordinated optimization for

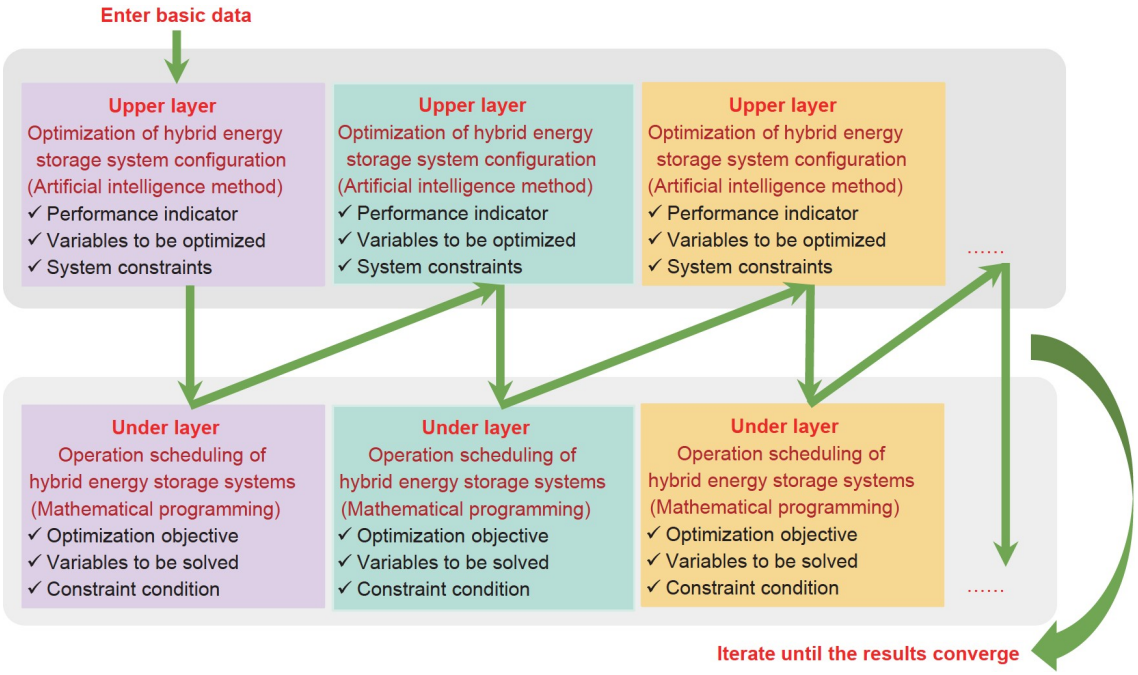

Figure 8 Schematic of the hierarchical optimization method.

the hybrid energy storage system. The upper layer focused on optimizing the capacity of hybrid energy storage, and the under layer optimized the operational parameters of the compressed air energy storage, achieving an integrated optimization between the system equipment configuration and operational parameters. Reference [35] applied a three-layer optimization approach to cooperatively optimize the hybrid energy storage system. The optimization outcomes indicated that this three-layer optimization method effectively boosted the system's energy utilization efficiency and carbon emission reduction rate.

However, in the literature, hybrid energy storage systems have been mainly optimized on the constraints of power output and the capacity in energy storage. Few studies have considered the impact of energy storage response characteristics, storage energy density and quality, and investment and operating costs on the optimization of hybrid energy storage systems. Therefore, this article proposed a new optimization framework (Figure 8):

(1) Obtaining the renewable energy utilization curve and user load curve for a typical year and using the typical year data as the basic data for system optimization design;

(2) Establishing a refined energy supply model for the hybrid energy storage system;

(3) A hybrid energy storage system was planned and designed using methods that combined artificial intelligence with mathematical programming;

(4) Obtaining a more optimal equipment configuration and operation plan for the hybrid energy storage system.

Multi-time scale optimization operation

In hybrid energy storage systems, different energy storage methods have vastly different response times to

renewable energy generation and user loads. The energy density and operation and maintenance costs between different energy storage methods show significant discrepancies [3,196]. Such multifaceted complexities pose significant challenges to the operational control of hybrid energy storage systems, rendering existing system operation methods have become unsuitable [197,198]. Currently, most reports are based on a day-ahead forecast profile from both the energy source and user load sides, formulating day-ahead scheduling plans for hybrid energy storage systems. However, during actual operation, the system working conditions are not real-time adjusted according to the errors in the day-ahead forecasts. This often leads hybrid storage systems to deviate from their optimal operating conditions, subsequently resulting in prominent issues such as "active storage" has limited advantages and low levels of energy storage utilization.

In order to solve the problems of mismatch between supply and demand energy, and the low utilization of hybrid energy storage system due to day-ahead forecast errors, some studies modified the day-ahead source-load prediction profile using short-term/ultra-short-term forecasting methods. This correction is based on day-ahead scheduling and developed more refined intra-day scheduling of hybrid energy storage systems [36,37]. Therefore, two-stage optimization operation schemes in hybrid energy storage system such as "day-ahead-intraday" [189], "day-ahead-real-time" [199], and "long-time scale-short-time scale" [170] have been proposed. Considering that the prediction accuracy is inversely proportional to the time span, some studies subdivided the intraday scheduling in hybrid energy storage systems according to the time scale. They adopted model predictive control techniques to fully harness the peak-shaving and valley-filling, and flexible scheduling advantages of hybrid energy storage systems, progressively reducing the mismatches in supply and demand energy from forecast errors on both the energy source and demand sides. Consequently, researchers have further proposed three-stage optimization operation schemes of hybrid energy storage systems, such as "hourly-minutely-secondly" [128] and "day-ahead-intraday-real-time" [200].

From a review of the literature, multi-time-scale optimization operation schemes have been summarized as depicted in Figure 9 [128,201–205].

(1) **Day-ahead optimization scheduling** The day-ahead (long-time scale) plans typically operates on a daily cycle, aiming for the lowest economic cost, minimum carbon emissions, maximum utilization of renewable energy, etc. They formulate hourly output plans for the hybrid energy storage system, taking into account constraints such as system energy balance and energy storage scheduling (all energy storage equipment participate in day-ahead scheduling).

(2) **Intraday optimization operation** Based on the day-ahead energy storage equipment start-stop schemes, intraday (short-time scale) plans commonly target the lowest operation and penalty costs, and minimum power fluctuation. These plans comprehensively consider constraints like short-term energy balance, and energy storage capacity and power output limits. Accordingly, they devise a scheduling plan for the hybrid energy storage system within that window, aiming to adjust and refine the day-ahead plan (all electricity storage and partial thermal storage equipment partake in intraday scheduling).

(3) **Real-time optimization adjustment** The real-time (short-time scale) plan typically prioritizes the safety and reliability of the hybrid energy storage system. Mainly considering constraints such as electricity energy equipment statuses and adjustability, they formulate short-time scale output adjustment schemes specifically for electricity storage devices (only electricity storage devices are involved in real-time scheduling).

However, the hybrid energy system structure is complex and contains a significant number of nonlinear

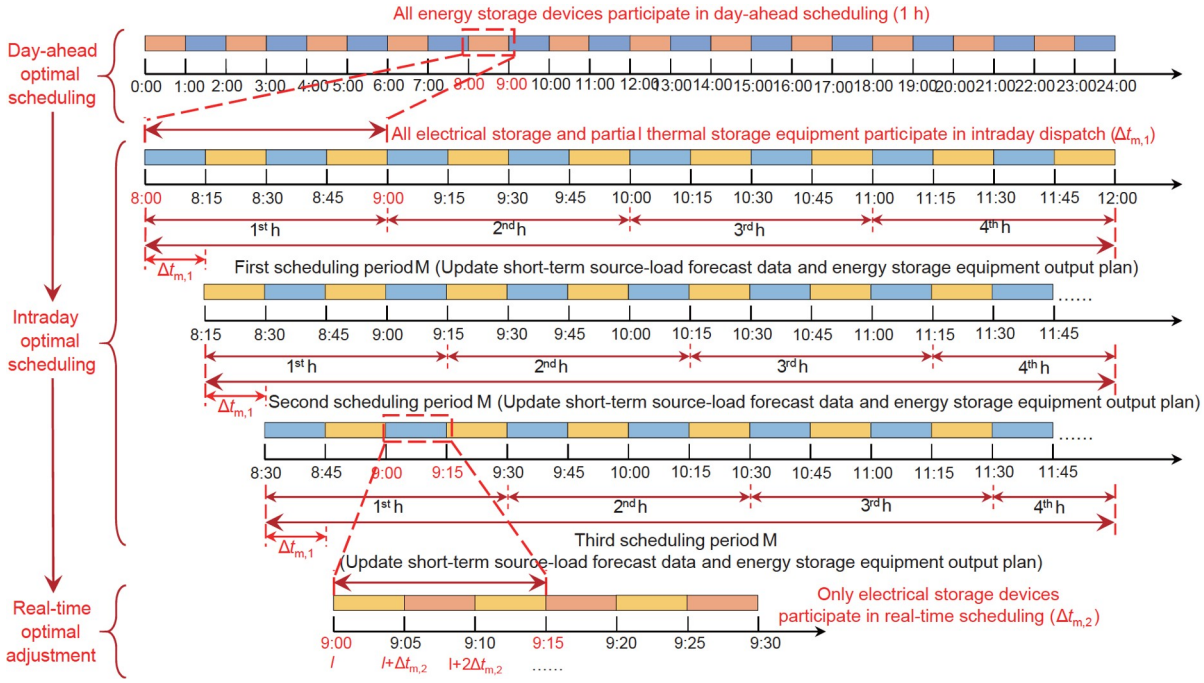

Figure 9 Multi-time scale optimization method for the hybrid energy storage system.

constraints. The current method of model linear simplification does not accurately represent energy equipment models, resulting in large deviations between operation control outcomes and actual operations.

Therefore, this paper proposed a new operational optimization framework:

(1) Establishing an energy prediction model based on artificial intelligence to predict the short-term/ultra-short-term renewable energy power output and the user load profile in industrial parks;

(2) Establishing a refined energy supply model for the hybrid energy storage system with considering the energy storage response time, the quality of the stored energy, and the size of the user load demand;

(3) Using artificial intelligence combined with model predictive control to dynamically optimize the performance scheduling of the hybrid energy storage system;

(4) Obtaining an optimized scheduling scheme for the hybrid energy storage system that has both short calculation time and high accuracy.

CONCLUSIONS

This paper summarized the advantages, current status, and future challenges of hybrid energy storage systems applied in industrial parks. The main conclusions are as follows.

Electricity and gas energy storage have advantages of high energy quality, and a wide range of applications. The electricity energy storage technologies have some shortcomings such as low energy density, high cost per unit, and certain security risks. The gas energy storage technology has a lower energy conversion efficiency when using electrolytic water and methanation, high equipment costs, and other shortcomings. Thermal energy storage technologies have the advantages of being economical, environmentally friendly,

and a long service life. However, there are shortcomings in terms of low energy quality, large thermal loss, low cycle efficiency, etc. Therefore, using a single energy storage method in an industrial park suffers from limitations and cannot meet the industrial park's needs.

Hybrid energy storage systems provide enhanced economy efficiency, energy conservation, carbon emissions mitigation, and renewable energy utilization within industrial parks. Power-power energy storage can effectively mitigate both short-term power imbalances and long-term energy imbalances between the energy source and load sides, but it does not consider other energy storage forms. The cooling-heating-power energy storage can significantly improve the renewable energy utilization, but it predominantly operates based on a "passive storage" strategy, and the "active storage" combined with the advance energy forecasting is insufficient. The power-heating/cooling-gas energy storage leverages the advantages of high energy density and extends storage duration of hydrogen energy or methane energy, but faces challenges like system complexity, modeling difficulties, and inferior economic returns. Therefore, in the optimization design process, it was necessary to carry out research into the combination of energy storage, mathematical programming, and artificial intelligence optimization to realize optimal design of a hybrid energy storage system.

Regarding the research on hybrid energy storage systems in industrial parks, current literature had extensively explored various facets, including modeling methods for hybrid energy storage, mechanisms of hybrid energy storage, and optimization design and operation methods. Nonetheless, a crucial issue in the modeling stage is how to incorporate the dynamic operating characteristics of "fast" and "slow" devices in the hybrid energy storage system. In the operational control phase, accurately and comprehensively elucidating the storage mechanisms of hybrid energy storage systems remains a pressing challenge. In the operational optimization process, more work is needed to integrate energy storage, advance load forecasting, and artificial intelligence optimization methods to realize the potential for dynamic performance optimization during the operational control phase of the hybrid energy storage system.

In current research on the optimization of hybrid energy storage systems, equipment configuration and rule-based operational strategy are typically considered concurrently for optimization design. This, combined with user preferences, was used to conduct design planning for the hybrid energy storage system. However, in practical applications, when the energy generation and energy consumption from renewable sources and load side had significant fluctuations, these optimization design methods were of little meaning. Therefore, a new optimization framework was proposed in this paper. Within this framework, artificial intelligence and mathematical programming were integrated to optimize and achieve the optimal configuration of the hybrid energy storage system. Subsequently, using short-term/ultra-short-term forecasting techniques, the energy demand for the next day or the upcoming hours in the industrial park was ascertained. With this foundational data, dynamic optimization scheduling of the hybrid energy storage system was conducted, resulting in a more efficient dispatch strategy for the system.

In the future, constructing reliable, accurate, and robust hybrid energy storage system models remains a scientific challenge. Another unresolved issue is how to harness the "active storage" advantages of hybrid energy storage systems to enhance the overall energy storage efficiency. Determining the appropriate storage capacity for hybrid energy storage systems in different scenarios requires further investigation. Additionally, how to coordinate the interaction between hybrid energy storage systems, energy supply systems, and load flexibility to improve energy supply benefits in industrial parks warrants further exploration.

Data availability

The original data are available from corresponding authors upon reasonable request.

Funding

This work was supported by the National Key R&D Program of China (2022YFB4201003), the National Natural Science Foundation of China (52278104), the Science and Technology Innovation Program of Hunan Province (2023RC1042), the Hunan Provincial Natural Science Foundation of China (2021JJ30118), and the Hunan Provincial Science and Technology Department (2021RC3042).

Author contributions

J.G. wrote the manuscript. J.P. revised the manuscript. All authors edited and proofread the manuscript.

Conflict of interest

The authors declare no conflict of interest.

References

1 Huo T, Ma Y, Xu L, *et al.* Carbon emissions in China's urban residential building sector through 2060: A dynamic scenario simulation. *Energy* 2022; **254**: 124395.
2 Liu Z, Deng Z, He G, *et al.* Challenges and opportunities for carbon neutrality in China. *Nat Rev Earth Environ* 2022; **3**: 141–155.
3 Li L, Zhang Y, Zhou T, *et al.* Mitigation of China's carbon neutrality to global warming. *Nat Commun* 2022; **13**: 5315.
4 Karunathilake H, Hewage K, Brinkerhoff J, *et al.* Optimal renewable energy supply choices for net-zero ready buildings: A life cycle thinking approach under uncertainty. *Energy Build* 2019; **201**: 70–89.
5 Lopes RA, Martins J, Aelenei D, *et al.* A cooperative net zero energy community to improve load matching. *Renew Energy* 2016; **93**: 1–13.
6 Perera ATD, Nik VM, Chen D, *et al.* Quantifying the impacts of climate change and extreme climate events on energy systems. *Nat Energy* 2020; **5**: 150–159.
7 Zhang Z, Chen M, Zhong T, *et al.* Carbon mitigation potential afforded by rooftop photovoltaic in China. *Nat Commun* 2023; **14**: 2347.
8 Winkler L, Pearce D, Nelson J, *et al.* The effect of sustainable mobility transition policies on cumulative urban transport emissions and energy demand. *Nat Commun* 2023; **14**: 2357.
9 Chowdhury AFMK, Deshmukh R, Wu GC, *et al.* Enabling a low-carbon electricity system for Southern Africa. *Joule* 2022; **6**: 1826–1844.
10 Camarasa C, Mata É, Navarro JPJ, *et al.* A global comparison of building decarbonization scenarios by 2050 towards 1.5–2 °C targets. *Nat Commun* 2022; **13**: 3077.
11 Zhao W, Diao H, Li P, *et al.* Transactive energy-based joint optimization of energy and flexible reserve for integrated electric-heat systems. *IEEE Access* 2021; **9**: 14491–14503.
12 Wang Y, Ren H, Dong L, *et al.* Smart solutions shape for sustainable low-carbon future: A review on smart cities and industrial parks in China. *Technol Forecast Soc Change* 2019; **144**: 103–117.
13 Sasse JP, Trutnevyte E. Regional impacts of electricity system transition in Central Europe until 2035. *Nat Commun* 2020; **11**: 4972.
14 Pena-Bello A, Parra D, Herberz M, *et al.* Integration of prosumer peer-to-peer trading decisions into energy community modelling. *Nat Energy* 2022; **7**: 74–82.
15 Heptonstall PJ, Gross RJK. A systematic review of the costs and impacts of integrating variable renewables into power

grids. *Nat Energy* 2021; **6**: 72–83.

16 Guo J, Wu D, Wang Y, *et al.* Co-optimization method research and comprehensive benefits analysis of regional integrated energy system. *Appl Energy* 2023; **340**: 121034.

17 Wu D, Guo J. Optimal design method and benefits research for a regional integrated energy system. *Renew Sustain Energy Rev* 2023; **186**: 113671.

18 Chatzivasileiadi A, Ampatzi E, Knight I. Characteristics of electrical energy storage technologies and their applications in buildings. *Renew Sustain Energy Rev* 2013; **25**: 814–830.

19 Berrill P, Wilson EJH, Reyna JL, *et al.* Decarbonization pathways for the residential sector in the United States. *Nat Clim Chang* 2022; **12**: 712–718.

20 Zhuo Z, Du E, Zhang N, *et al.* Cost increase in the electricity supply to achieve carbon neutrality in China. *Nat Commun* 2022; **13**: 3172.

21 Odenweller A, Ueckerdt F, Nemet GF, *et al.* Probabilistic feasibility space of scaling up green hydrogen supply. *Nat Energy* 2022; **7**: 854–865.

22 Ustaoglu A, Yaras A, Hekimoğlu G, *et al.* Expanded glass sphere/lauryl alcohol composite in gypsum: Physico-mechanical properties, energy storage performance and environmental impact assessment. *Sol Energy* 2023; **262**: 111925.

23 Mulugetta Y, Sokona Y, Trotter PA, *et al.* Africa needs context-relevant evidence to shape its clean energy future. *Nat Energy* 2022; **7**: 1015–1022.

24 Gruber K, Gauster T, Laaha G, *et al.* Profitability and investment risk of Texan power system winterization. *Nat Energy* 2022; **7**: 409–416.

25 Iyer G, Ou Y, Edmonds J, *et al.* Ratcheting of climate pledges needed to limit peak global warming. *Nat Clim Chang* 2022; **12**: 1129–1135.

26 Abhyankar N, Lin J, Kahrl F, *et al.* Achieving an 80% carbon-free electricity system in China by 2035. *iScience* 2022; **25**: 105180.

27 Sepulveda NA, Jenkins JD, Edington A, *et al.* The design space for long-duration energy storage in decarbonized power systems. *Nat Energy* 2021; **6**: 506–516.

28 Kittner N, Lill F, Kammen DM. Energy storage deployment and innovation for the clean energy transition. *Nat Energy* 2017; **2**: 17125.

29 Li P, Wang Z, Liu H, *et al.* Bi-level optimal configuration strategy of community integrated energy system with coordinated planning and operation. *Energy* 2021; **236**: 121539.

30 Guo M, Mu Y, Jia H, *et al.* Electric/thermal hybrid energy storage planning for park-level integrated energy systems with second-life battery utilization. *Adv Appl Energy* 2021; **4**: 100064.

31 Yang X, Nielsen CP, Song S, *et al.* Breaking the hard-to-abate bottleneck in China's path to carbon neutrality with clean hydrogen. *Nat Energy* 2022; **7**: 955–965.

32 Manoharan P, Subramaniam U, Babu TS, *et al.* Improved perturb and observation maximum power point tracking technique for solar photovoltaic power generation systems. *IEEE Syst J* 2021; **15**: 3024–3035.

33 Xu L, Wang Z, Liu Y, *et al.* Energy allocation strategy based on fuzzy control considering optimal decision boundaries of standalone hybrid energy systems. *J Clean Prod* 2021; **279**: 123810.

34 Guo J, Liu Z, Wu X, *et al.* Two-layer co-optimization method for a distributed energy system combining multiple energy storages. *Appl Energy* 2022; **322**: 119486.

35 Yan Y, Zhang C, Li K, *et al.* An integrated design for hybrid combined cooling, heating and power system with compressed air energy storage. *Appl Energy* 2018; **210**: 1151–1166.

36 Vivek V, Malghan D, Mukherjee K. Toward achieving persistent behavior change in household water conservation. *Proc Natl Acad Sci USA* 2021; **118**: e2023014118.

37 Goldstein B, Gounaridis D, Newell JP. The carbon footprint of household energy use in the United States. *Proc Natl Acad Sci USA* 2020; **117**: 19122–19130.

38 Shen Y, Shi X, Zhao Z, *et al.* Measuring the low-carbon energy transition in Chinese cities. *iScience* 2023; **26**: 105803.

39 Way R, Ives MC, Mealy P, *et al.* Empirically grounded technology forecasts and the energy transition. *Joule* 2022; **6**: 2057–2082.

40 Hsu A, Wang X, Tan J, *et al.* Predicting European cities' climate mitigation performance using machine learning. *Nat Commun* 2022; **13**: 7487.

41 Barrett J, Pye S, Betts-Davies S, *et al.* Energy demand reduction options for meeting national zero-emission targets in the United Kingdom. *Nat Energy* 2022; **7**: 726–735.

42 Wiser R, Rand J, Seel J, *et al.* Expert elicitation survey predicts 37% to 49% declines in wind energy costs by 2050. *Nat Energy* 2021; **6**: 555–565.

43 Sovacool BK, Upham P, Martiskainen M, *et al.* Policy prescriptions to address energy and transport poverty in the United Kingdom. *Nat Energy* 2023; **8**: 273–283.

44 Luderer G, Madeddu S, Merfort L, *et al.* Impact of declining renewable energy costs on electrification in low-emission scenarios. *Nat Energy* 2022; **7**: 32–42.

45 Nikam V, Kalkhambkar V. A review on control strategies for microgrids with distributed energy resources, energy storage systems, and electric vehicles. *Int Trans Electr Energ Syst* 2021; **31**: e12607.

46 Bistline JET, Blanford G, Grant J, *et al.* Economy-wide evaluation of CO_2 and air quality impacts of electrification in the United States. *Nat Commun* 2022; **13**: 6693.

47 Pratama YW, Patrizio P, Mac Dowell N. National priorities in the power system transition to net-zero: No one size fits all. *iScience* 2022; **25**: 105260.

48 Wang J, Ma C, Wu J. Thermodynamic analysis of a combined cooling, heating and power system based on solar thermal biomass gasification. *Appl Energy* 2019; **247**: 102–115.

49 He J, Shi C, Wei T, *et al.* Stochastic model predictive control of hybrid energy storage for improving AGC performance of thermal generators. *IEEE Trans Smart Grid* 2022; **13**: 393–405.

50 Caliano M, Bianco N, Graditi G, *et al.* Design optimization and sensitivity analysis of a biomass-fired combined cooling, heating and power system with thermal energy storage systems. *Energy Convers Manage* 2017; **149**: 631–645.

51 Wei X, Qiu R, Liang Y, *et al.* Roadmap to carbon emissions neutral industrial parks: energy, economic and environmental analysis. *Energy* 2022; **238**: 121732.

52 Koohi-Fayegh S, Rosen MA. A review of energy storage types, applications and recent developments. *J Energy Storage* 2020; **27**: 101047.

53 Sengupta S, Adams PJ, Deetjen TA, *et al.* Subnational implications from climate and air pollution policies in India's electricity sector. *Science* 2022; **378**: eabh1484.

54 Ren C, Zhou X, Wang C, *et al.* Ageing threatens sustainability of smallholder farming in China. *Nature* 2023; **616**: 96–103.

55 Hannan MA, Hoque MM, Mohamed A, *et al.* Review of energy storage systems for electric vehicle applications: Issues and challenges. *Renew Sustain Energy Rev* 2017; **69**: 771–789.

56 Zheng J, Duan H, Zhou S, *et al.* Limiting global warming to below 1.5°C from 2°C: An energy-system-based multi-model analysis for China. *Energy Economics* 2021; **100**: 105355.

57 Rahman MM, Oni AO, Gemechu E, *et al.* Assessment of energy storage technologies: A review. *Energy Convers Manage* 2020; **223**: 113295.

58 De Rosa M, Afanaseva O, Fedyukhin AV, *et al.* Prospects and characteristics of thermal and electrochemical energy storage systems. *J Energy Storage* 2021; **44**: 103443.

59 Hambel C, Kraft H, Schwartz E. Optimal carbon abatement in a stochastic equilibrium model with climate change. *Eur Economic Rev* 2021; **132**: 103642.

60 Gou X, Chen Q, He KL. Real-time quantification for dynamic heat storage characteristic of district heating system and its application in dispatch of integrated energy system. *Energy* 2022; **259**: 124960.

61 Zakeri B, Syri S. Electrical energy storage systems: a comparative life cycle cost analysis. *Renew Sustain Energy Rev*

2015; **42**: 569–596.

62 Liu J, Chen X, Cao S, *et al.* Overview on hybrid solar photovoltaic-electrical energy storage technologies for power supply to buildings. *Energy Convers Manage* 2019; **187**: 103–121.

63 Moy K, Lee SB, Harris S, *et al.* Design and validation of synthetic duty cycles for grid energy storage dispatch using lithium-ion batteries. *Adv Appl Energy* 2021; **4**: 100065.

64 Albertus P, Manser JS, Litzelman S. Long-duration electricity storage applications, economics, and technologies. *Joule* 2020; **4**: 21–32.

65 Javed MS, Ma T, Jurasz J, *et al.* Solar and wind power generation systems with pumped hydro storage: Review and future perspectives. *Renew Energy* 2020; **148**: 176–192.

66 Krishan O, Suhag S. An updated review of energy storage systems: Classification and applications in distributed generation power systems incorporating renewable energy resources. *Int J Energy Res* 2019; **43**: 6171–6210.

67 Lin X, Zamora R. Controls of hybrid energy storage systems in microgrids: Critical review, case study and future trends. *J Energy Storage* 2022; **47**: 103884.

68 Chong LW, Wong YW, Rajkumar RK, *et al.* Hybrid energy storage systems and control strategies for stand-alone renewable energy power systems. *Renew Sustain Energy Rev* 2016; **66**: 174–189.

69 Tie D, Huang S, Wang J, *et al.* Hybrid energy storage devices: Advanced electrode materials and matching principles. *Energy Storage Mater* 2019; **21**: 22–40.

70 Jing W, Lai CH, Wong WSH, *et al.* A comprehensive study of battery-supercapacitor hybrid energy storage system for standalone PV power system in rural electrification. *Appl Energy* 2018; **224**: 340–356.

71 Fan M, Wang J, Kong X, *et al.* Experimental evaluation of the cascaded energy storage radiator for constructing indoor thermal environment in winter. *Appl Energy* 2023; **332**: 120503.

72 Borri E, Zsembinszki G, Cabeza LF. Recent developments of thermal energy storage applications in the built environment: A bibliometric analysis and systematic review. *Appl Therm Eng* 2021; **189**: 116666.

73 Pan G, Hu Q, Gu W, *et al.* Assessment of plum rain's impact on power system emissions in Yangtze-Huaihe River basin of China. *Nat Commun* 2021; **12**: 6156.

74 Pomerantseva E, Bonaccorso F, Feng X, *et al.* Energy storage: The future enabled by nanomaterials. *Science* 2019; **366**: eaan8285.

75 Palacios A, Barreneche C, Navarro ME, *et al.* Thermal energy storage technologies for concentrated solar power—A review from a materials perspective. *Renew Energy* 2020; **156**: 1244–1265.

76 Mansø M, Petersen AU, Wang Z, *et al.* Molecular solar thermal energy storage in photoswitch oligomers increases energy densities and storage times. *Nat Commun* 2018; **9**: 1945.

77 Li Z, Lu Y, Huang R, *et al.* Applications and technological challenges for heat recovery, storage and utilisation with latent thermal energy storage. *Appl Energy* 2021; **283**: 116277.

78 Guelpa E, Verda V. Thermal energy storage in district heating and cooling systems: A review. *Appl Energy* 2019; **252**: 113474.

79 Nie B, Palacios A, Zou B, *et al.* Review on phase change materials for cold thermal energy storage applications. *Renew Sustain Energy Rev* 2020; **134**: 110340.

80 Jouhara H, Żabnieńska-Góra A, Khordehgah N, *et al.* Latent thermal energy storage technologies and applications: A review. *Int J Thermofluids* 2020; **5-6**: 100039.

81 Koçak B, Fernandez AI, Paksoy H. Review on sensible thermal energy storage for industrial solar applications and sustainability aspects. *Sol Energy* 2020; **209**: 135–169.

82 Chauhan VK, Shukla SK, Rathore PKS. A systematic review for performance augmentation of solar still with heat storage materials: A state of art. *J Energy Storage* 2022; **47**: 103578.

83 Qiu L, Liu JZ, Chang SLY, *et al.* Biomimetic superelastic graphene-based cellular monoliths. *Nat Commun* 2012; **3**: 1241.

84 Elberry AM, Thakur J, Santasalo-Aarnio A, *et al.* Large-scale compressed hydrogen storage as part of renewable

electricity storage systems. *Int J Hydrogen Energy* 2021; **46**: 15671–15690.

85 Erickson ED, Tominac PA, Zavala VM. Biogas production in United States dairy farms incentivized by electricity policy changes. *Nat Sustain* 2023; **6**: 438–446.

86 Krevor S, de Coninck H, Gasda SE, *et al.* Subsurface carbon dioxide and hydrogen storage for a sustainable energy future. *Nat Rev Earth Environ* 2023; **4**: 102–118.

87 Zivar D, Kumar S, Foroozesh J. Underground hydrogen storage: A comprehensive review. *Int J Hydrogen Energy* 2021; **46**: 23436–23462.

88 Lang C, Jia Y, Yao X. Recent advances in liquid-phase chemical hydrogen storage. *Energy Storage Mater* 2020; **26**: 290–312.

89 Tarhan C, Çil MA. A study on hydrogen, the clean energy of the future: hydrogen storage methods. *J Energy Storage* 2021; **40**: 102676.

90 Hassan IA, Ramadan HS, Saleh MA, *et al.* Hydrogen storage technologies for stationary and mobile applications: Review, analysis and perspectives. *Renew Sustain Energy Rev* 2021; **149**: 111311.

91 Fan G, Liu Z, Liu X, *et al.* Energy management strategies and multi-objective optimization of a near-zero energy community energy supply system combined with hybrid energy storage. *Sustain Cities Soc* 2022; **83**: 103970.

92 Liu Z, Guo J, Li Y, *et al.* Multi-scenario analysis and collaborative optimization of a novel distributed energy system coupled with hybrid energy storage for a nearly zero-energy community. *J Energy Storage* 2021; **41**: 102992.

93 Shin H, Hansen KU, Jiao F. Techno-economic assessment of low-temperature carbon dioxide electrolysis. *Nat Sustain* 2021; **4**: 911–919.

94 Luo Z, Peng J, Cao J, *et al.* Demand flexibility of residential buildings: Definitions, flexible loads, and quantification methods. *Engineering* 2022; **16**: 123–140.

95 Kohlhepp P, Harb H, Wolisz H, *et al.* Large-scale grid integration of residential thermal energy storages as demand-side flexibility resource: A review of international field studies. *Renew Sustain Energy Rev* 2019; **101**: 527–547.

96 Ding Y, Bai Y, Tian Z, *et al.* Coordinated optimization of robustness and flexibility of building heating systems for demand response control considering prediction uncertainty. *Appl Therm Eng* 2023; **223**: 120024.

97 Chen Z, Sun Y, Xin A, *et al.* Integrated demand response characteristics of industrial park: A review. *J Modern Power Syst Clean Energy* 2020; **8**: 15–26.

98 Zheng X, Qiu Y, Zhan X, *et al.* Optimization based planning of urban energy systems: retrofitting a Chinese industrial park as a case-study. *Energy* 2017; **139**: 31–41.

99 Nik VM, Moazami A. Using collective intelligence to enhance demand flexibility and climate resilience in urban areas. *Appl Energy* 2021; **281**: 116106.

100 Gonzalez JM, Tomlinson JE, Martínez Ceseña EA, *et al.* Designing diversified renewable energy systems to balance multisector performance. *Nat Sustain* 2023; **6**: 415–427.

101 Parrish B, Heptonstall P, Gross R, *et al.* A systematic review of motivations, enablers and barriers for consumer engagement with residential demand response. *Energy Policy* 2020; **138**: 111221.

102 Sovacool BK, Kester J, Noel L, *et al.* Actors, business models, and innovation activity systems for vehicle-to-grid (V2G) technology: A comprehensive review. *Renew Sustain Energy Rev* 2020; **131**: 109963.

103 Wang H, Feng K, Wang P, *et al.* China's electric vehicle and climate ambitions jeopardized by surging critical material prices. *Nat Commun* 2023; **14**: 1246.

104 Guan Y, Yan J, Shan Y, *et al.* Burden of the global energy price crisis on households. *Nat Energy* 2023; **8**: 304–316.

105 Nunes A, Woodley L, Rossetti P. Re-thinking procurement incentives for electric vehicles to achieve net-zero emissions. *Nat Sustain* 2022; **5**: 527–532.

106 Singh K, Singh A. Behavioural modelling for personal and societal benefits of V2G/V2H integration on EV adoption. *Appl Energy* 2022; **319**: 119265.

107 Noorollahi Y, Golshanfard A, Aligholian A, *et al.* Sustainable energy system planning for an industrial zone by integrating electric vehicles as energy storage. *J Energy Storage* 2020; **30**: 101553.

108 Lyu Y, Liu Y, Guo Y, *et al.* Review of green development of Chinese industrial parks. *Energy Strategy Rev* 2022; **42**: 100867.

109 Hassija V, Chamola V, Garg S, *et al.* A blockchain-based framework for lightweight data sharing and energy trading in V2G network. *IEEE Trans Veh Technol* 2020; **69**: 5799–5812.

110 Tepe B, Figgener J, Englberger S, *et al.* Optimal pool composition of commercial electric vehicles in V2G fleet operation of various electricity markets. *Appl Energy* 2022; **308**: 118351.

111 Mahmoud M, Ramadan M, Olabi AG, *et al.* A review of mechanical energy storage systems combined with wind and solar applications. *Energy Convers Manage* 2020; **210**: 112670.

112 Chen H, Cong TN, Yang W, *et al.* Progress in electrical energy storage system: A critical review. *Prog Nat Sci* 2009; **19**: 291–312.

113 Harsini AE. Resilience-oriented district energy system integrated with renewable energy and multi-level seasonal energy storage. *J Energy Storage* 2023; **72**: 108645.

114 Lennon A, Lunardi M, Hallam B, *et al.* The aluminium demand risk of terawatt photovoltaics for net zero emissions by 2050. *Nat Sustain* 2022; **5**: 357–363.

115 Su H, Zio E, Zhang J, *et al.* A systematic method for the analysis of energy supply reliability in complex Integrated Energy Systems considering uncertainties of renewable energies, demands and operations. *J Clean Prod* 2020; **267**: 122117.

116 Wang J, Lu Z, Li M, *et al.* Energy, exergy, exergoeconomic and environmental (4E) analysis of a distributed generation solar-assisted CCHP (combined cooling, heating and power) gas turbine system. *Energy* 2019; **175**: 1246–1258.

117 Pahle M, Tietjen O, Osorio S, *et al.* Safeguarding the energy transition against political backlash to carbon markets. *Nat Energy* 2022; **7**: 290–296.

118 Zibunas C, Meys R, Kätelhön A, *et al.* Cost-optimal pathways towards net-zero chemicals and plastics based on a circular carbon economy. *Comput Chem Eng* 2022; **162**: 107798.

119 Jafari M, Botterud A, Sakti A. Decarbonizing power systems: A critical review of the role of energy storage. *Renew Sustain Energy Rev* 2022; **158**: 112077.

120 Gür TM. Review of electrical energy storage technologies, materials and systems: Challenges and prospects for large-scale grid storage. *Energy Environ Sci* 2018; **11**: 2696–2767.

121 Mildenberger M, Howe PD, Trachtman S, *et al.* The effect of public safety power shut-offs on climate change attitudes and behavioural intentions. *Nat Energy* 2022; **7**: 736–743.

122 Fang J, Xu Q, Tang R, *et al.* Research on demand management of hybrid energy storage system in industrial park based on variational mode decomposition and Wigner-Ville distribution. *J Energy Storage* 2021; **42**: 103073.

123 Yuan J, Li Y, Luo X, *et al.* A new hybrid multi-criteria decision-making approach for developing integrated energy systems in industrial parks. *J Clean Prod* 2020; **270**: 122119.

124 Shen W, Zeng B, Zeng M. Multi-timescale rolling optimization dispatch method for integrated energy system with hybrid energy storage system. *Energy* 2023; **283**: 129006.

125 Liu J, Cao X, Xu Z, *et al.* Resilient operation of multi-energy industrial park based on integrated hydrogen-electricity-heat microgrids. *Int J Hydrogen Energy* 2021; **46**: 28855–28869.

126 Tang R, Xu Q, Fang J, *et al.* Optimal configuration strategy of hybrid energy storage system on industrial load side based on frequency division algorithm. *J Energy Storage* 2022; **50**: 104645.

127 Yang A, Wang H, Li B, *et al.* Capacity optimization of hybrid energy storage system for microgrid based on electric vehicles' orderly charging/discharging strategy. *J Clean Prod* 2023; **411**: 137346.

128 Li P, Wang Z, Wang J, *et al.* A multi-time-space scale optimal operation strategy for a distributed integrated energy system. *Appl Energy* 2021; **289**: 116698.

129 Zhu D, Yang B, Ma C, *et al.* Stochastic gradient-based fast distributed multi-energy management for an industrial park with temporally-coupled constraints. *Appl Energy* 2022; **317**: 119107.

130 Zhang Z, Zhou K, Yang S. Optimal selection of energy storage system sharing schemes in industrial parks considering

battery degradation. *J Energy Storage* 2023; **57**: 106215.

131 Zhu S, Mac Kinnon M, Carlos-Carlos A, *et al.* Decarbonization will lead to more equitable air quality in California. *Nat Commun* 2022; **13**: 5738.

132 Zhang S, Chen W. Assessing the energy transition in China towards carbon neutrality with a probabilistic framework. *Nat Commun* 2022; **13**: 87.

133 Ulpiani G, Vetters N, Melica G, *et al.* Towards the first cohort of climate-neutral cities: expected impact, current gaps, and next steps to take to establish evidence-based zero-emission urban futures. *Sustain Cities Soc* 2023; **95**: 104572.

134 Luo B, Ye D, Wang L. Recent progress on integrated energy conversion and storage systems. *Adv Sci* 2017; **4**: 1700104.

135 Matar W, Shabaneh R. Viability of seasonal natural gas storage in the Saudi energy system. *Energy Strategy Rev* 2020; **32**: 100549.

136 Li Y, Zhang F, Li Y, *et al.* An improved two-stage robust optimization model for CCHP-P2G microgrid system considering multi-energy operation under wind power outputs uncertainties. *Energy* 2021; **223**: 120048.

137 Helveston JP, He G, Davidson MR. Quantifying the cost savings of global solar photovoltaic supply chains. *Nature* 2022; **612**: 83–87.

138 Liu C, Wang H, Wang ZY, *et al.* Research on life cycle low carbon optimization method of multi-energy complementary distributed energy system: A review. *J Clean Prod* 2022; **336**: 130380.

139 He Y, Guo S, Zhou J, *et al.* Multi-objective planning-operation co-optimization of renewable energy system with hybrid energy storages. *Renew Energy* 2022; **184**: 776–790.

140 He W, Wang J. Optimal selection of air expansion machine in Compressed Air Energy Storage: A review. *Renew Sustain Energy Rev* 2018; **87**: 77–95.

141 Gao J, Chen JJ, Qi BX, *et al.* A cost-effective two-stage optimization model for microgrid planning and scheduling with compressed air energy storage and preventive maintenance. *Int J Electr Power Energy Syst* 2021; **125**: 106547.

142 Dang Q, Wu D, Boulet B. EV fleet as virtual battery resource for community microgrid energy storage planning. *IEEE Can J Electr Comput Eng* 2021; **44**: 431–442.

143 Ma K, Zhang R, Yang J, *et al.* Collaborative optimization scheduling of integrated energy system considering user dissatisfaction. *Energy* 2023; **274**: 127311.

144 Al-Ghussain L, Darwish Ahmad A, Abubaker AM, *et al.* An integrated photovoltaic/wind/biomass and hybrid energy storage systems towards 100% renewable energy microgrids in university campuses. *Sustain Energy Technol Assess* 2021; **46**: 101273.

145 Naderipour A, Ramtin AR, Abdullah A, *et al.* Hybrid energy system optimization with battery storage for remote area application considering loss of energy probability and economic analysis. *Energy* 2022; **239**: 122303.

146 Liu Z, Fan G, Sun D, *et al.* A novel distributed energy system combining hybrid energy storage and a multi-objective optimization method for nearly zero-energy communities and buildings. *Energy* 2022; **239**: 122577.

147 Gjorgievski VZ, Markovska N, Abazi A, *et al.* The potential of power-to-heat demand response to improve the flexibility of the energy system: an empirical review. *Renew Sustain Energy Rev* 2021; **138**: 110489.

148 Guelpa E, Bellando L, Giordano A, *et al.* Optimal configuration of power-to-cool technology in district cooling systems. *Proc IEEE* 2020; **108**: 1612–1622.

149 Shi T, Han F, Chen L, *et al.* Study on value co-creation and evolution game of low-carbon technological innovation ecosystem. *J Clean Prod* 2023; **414**: 137720.

150 Javadi EA, Joorabian M, Barati H. A sustainable framework for resilience enhancement of integrated energy systems in the presence of energy storage systems and fast-acting flexible loads. *J Energy Storage* 2022; **49**: 104099.

151 Heidari A, Mortazavi SS, Bansal RC. Stochastic effects of ice storage on improvement of an energy hub optimal operation including demand response and renewable energies. *Appl Energy* 2020; **261**: 114393.

152 Bi SL, Bauer N, Jewell J. Coal-exit alliance must confront freeriding sectors to propel Paris-aligned momentum. *Nat Clim Chang* 2023; **13**: 130–139.

153 Meng F, Dillingham G. Life cycle analysis of natural gas-fired distributed combined heat and power versus centralized power plant. *Energy Fuels* 2018; **32**: 11731–11741.

154 Izadi A, Shahafve M, Ahmadi P. Neural network genetic algorithm optimization of a transient hybrid renewable energy system with solar/wind and hydrogen storage system for zero energy buildings at various climate conditions. *Energy Convers Manage* 2022; **260**: 115593.

155 Jia K, Liu C, Li S, *et al.* Modeling and optimization of a hybrid renewable energy system integrated with gas turbine and energy storage. *Energy Convers Manage* 2023; **279**: 116763.

156 Babatunde OM, Munda JL, Hamam Y. Off-grid hybrid photovoltaic—micro wind turbine renewable energy system with hydrogen and battery storage: Effects of sun tracking technologies. *Energy Convers Manage* 2022; **255**: 115335.

157 Liu X. Research on optimal placement of low-carbon equipment capacity in integrated energy system considering carbon emission and carbon trading. *Intl J Energy Res* 2022; **46**: 20535–20555.

158 Pan G, Gu W, Lu Y, *et al.* Optimal planning for electricity-hydrogen integrated energy system considering power to hydrogen and heat and seasonal storage. *IEEE Trans Sustain Energy* 2020; **11**: 2662–2676.

159 Wang L, Liang DH, Crossland AF, *et al.* Coordination of multiple energy storage units in a low-voltage distribution network. *IEEE Trans Smart Grid* 2015; **6**: 2906–2918.

160 Luo F, Shao J, Jiao Z, *et al.* Research on optimal allocation strategy of multiple energy storage in regional integrated energy system based on operation benefit increment. *Int J Electr Power Energy Syst* 2021; **125**: 106376.

161 Wang H, Xie Z, Pu L, *et al.* Energy management strategy of hybrid energy storage based on Pareto optimality. *Appl Energy* 2022; **327**: 120095.

162 Nord N, Shakerin M, Tereshchenko T, *et al.* Data informed physical models for district heating grids with distributed heat sources to understand thermal and hydraulic aspects. *Energy* 2021; **222**: 119965.

163 van der Heijde B, Fuchs M, Ribas Tugores C, *et al.* Dynamic equation-based thermo-hydraulic pipe model for district heating and cooling systems. *Energy Convers Manage* 2017; **151**: 158–169.

164 Bird TJ, Jain N. Dynamic modeling and validation of a micro-combined heat and power system with integrated thermal energy storage. *Appl Energy* 2020; **271**: 114955.

165 Eladl AA, El-Afifi MI, El-Saadawi MM, *et al.* A review on energy hubs: models, methods, classification, applications, and future trends. *Alexandria Eng J* 2023; **68**: 315–342.

166 Salimi M, Ghasemi H, Adelpour M, *et al.* Optimal planning of energy hubs in interconnected energy systems: A case study for natural gas and electricity. *IET Gener Transm Dis* 2015; **9**: 695–707.

167 Hu J, Liu X, Shahidehpour M, *et al.* Optimal operation of energy hubs with large-scale distributed energy resources for distribution network congestion management. *IEEE Trans Sustain Energy* 2021; **12**: 1755–1765.

168 Chen X, Kang C, O'Malley M, *et al.* Increasing the flexibility of combined heat and power for wind power integration in china: modeling and implications. *IEEE Trans Power Syst* 2015; **30**: 1848–1857.

169 Ma T, Wu J, Hao L, *et al.* Energy flow matrix modeling and optimal operation analysis of multi energy systems based on graph theory. *Appl Therm Eng* 2019; **146**: 648–663.

170 Chen B, Wu W, Guo Q, *et al.* An efficient optimal energy flow model for integrated energy systems based on energy circuit modeling in the frequency domain. *Appl Energy* 2022; **326**: 119923.

171 Du Y, Xue Y, Wu W, *et al.* Coordinated planning of integrated electric and heating system considering the optimal reconfiguration of district heating network. *IEEE Trans Power Syst* 2023; **39**: 794–808.

172 Jaxa-Rozen M, Trutnevyte E. Sources of uncertainty in long-term global scenarios of solar photovoltaic technology. *Nat Clim Chang* 2021; **11**: 266–273.

173 Asensio EM, Magallán GA, De Angelo CH, *et al.* Energy management on battery/ultracapacitor hybrid energy storage system based on adjustable bandwidth filter and sliding-mode control. *J Energy Storage* 2020; **30**: 101569.

174 Zhang M, Guo C, Fang T, *et al*. Hybrid energy storage power allocation based on moving average filtering and VMD. In: *Proceedings of the 2021 International Conference on Information Control, Electrical Engineering and Rail Transit (ICEERT)*. Lanzhou: IEEE, 2021.

175 Karrari S, Ludwig N, De Carne G, *et al.* Sizing of hybrid energy storage systems using recurring daily patterns. *IEEE Trans Smart Grid* 2022; **13**: 3290–3300.

176 Roy PKS, Karayaka HB, Yan Y, *et al.* Investigations into best cost battery-supercapacitor hybrid energy storage system for a utility scale PV array. *J Energy Storage* 2019; **22**: 50–59.

177 Eckert JJ, Silva LCA, Dedini FG, *et al.* Electric vehicle powertrain and fuzzy control multi-objective optimization, considering dual hybrid energy storage systems. *IEEE Trans Veh Technol* 2020; **69**: 3773–3782.

178 Boudia A, Messalti S, Harrag A, *et al.* New hybrid photovoltaic system connected to superconducting magnetic energy storage controlled by PID-fuzzy controller. *Energy Convers Manage* 2021; **244**: 114435.

179 Shi J, Wang L, Lee WJ, *et al.* Hybrid energy storage system (HESS) optimization enabling very short-term wind power generation scheduling based on output feature extraction. *Appl Energy* 2019; **256**: 113915.

180 Liu J, Cao S, Chen X, *et al.* Energy planning of renewable applications in high-rise residential buildings integrating battery and hydrogen vehicle storage. *Appl Energy* 2021; **281**: 116038.

181 Zou B, Peng J, Li S, *et al.* Comparative study of the dynamic programming-based and rule-based operation strategies for grid-connected PV-battery systems of office buildings. *Appl Energy* 2022; **305**: 117875.

182 Di Somma M, Yan B, Bianco N, *et al.* Multi-objective design optimization of distributed energy systems through cost and exergy assessments. *Appl Energy* 2017; **204**: 1299–1316.

183 Li M, Zhou M, Feng Y, *et al.* Integrated design and optimization of natural gas distributed energy system for regional building complex. *Energy Build* 2017; **154**: 81–95.

184 Khanna TM, Baiocchi G, Callaghan M, *et al.* A multi-country meta-analysis on the role of behavioural change in reducing energy consumption and CO_2 emissions in residential buildings. *Nat Energy* 2021; **6**: 925–932.

185 Zhang H, Zhang F, Yang L, *et al.* Multi-parameter collaborative power prediction to improve the efficiency of supercapacitor-based regenerative braking system. *IEEE Trans Energy Convers* 2021; **36**: 2612–2622.

186 Zhou Z, Zhang J, Liu P, *et al.* A two-stage stochastic programming model for the optimal design of distributed energy systems. *Appl Energy* 2013; **103**: 135–144.

187 Wang Y, Wang Y, Huang Y, *et al.* Operation optimization of regional integrated energy system based on the modeling of electricity-thermal-natural gas network. *Appl Energy* 2019; **251**: 113410.

188 Li P, Wang Z, Wang N, *et al.* Stochastic robust optimal operation of community integrated energy system based on integrated demand response. *Int J Electr Power Energy Syst* 2021; **128**: 106735.

189 Yamchi HB, Safari A, Guerrero JM. A multi-objective mixed integer linear programming model for integrated electricity-gas network expansion planning considering the impact of photovoltaic generation. *Energy* 2021; **222**: 119933.

190 Ogunsina AA, Petinrin MO, Petinrin OO, *et al.* Optimal distributed generation location and sizing for loss minimization and voltage profile optimization using ant colony algorithm. *SN Appl Sci* 2021; **3**: 248.

191 Zhang L, Kuang J, Sun B, *et al.* A two-stage operation optimization method of integrated energy systems with demand response and energy storage. *Energy* 2020; **208**: 118423.

192 Mavromatidis G, Orehounig K, Carmeliet J. Design of distributed energy systems under uncertainty: A two-stage stochastic programming approach. *Appl Energy* 2018; **222**: 932–950.

193 Sadamoto T, Chakrabortty A, Ishizaki T, *et al.* Dynamic modeling, stability, and control of power systems with distributed energy resources: Handling faults using two control methods in tandem. *IEEE Control Syst* 2019; **39**: 34–65.

194 Li F, Sun B, Zhang C, *et al.* A hybrid optimization-based scheduling strategy for combined cooling, heating, and power system with thermal energy storage. *Energy* 2019; **188**: 115948.

195 Li K, Wei X, Yan Y, *et al.* Bi-level optimization design strategy for compressed air energy storage of a combined cooling, heating, and power system. *J Energy Storage* 2020; **31**: 101642.

196 Cherp A, Vinichenko V, Tosun J, *et al.* National growth dynamics of wind and solar power compared to the growth required for global climate targets. *Nat Energy* 2021; **6**: 742–754.

197 Tong K, Ramaswami A, Xu CK, *et al.* Measuring social equity in urban energy use and interventions using fine-scale data. *Proc Natl Acad Sci USA* 2021; **118**: e2023554118.

198 Shupler M, Mangeni J, Tawiah T, *et al.* Modelling of supply and demand-side determinants of liquefied petroleum gas consumption in peri-urban Cameroon, Ghana and Kenya. *Nat Energy* 2021; **6**: 1198–1210.

199 Wang Z, Tao H, Cai W, *et al.* Study on the multitime scale rolling optimization operation of a near-zero energy building energy supply system. *Energy Convers Manage* 2022; **270**: 116255.

200 Hu J, Zhou H, Li Y, *et al.* Multi-time scale energy management strategy of aggregator characterized by photovoltaic generation and electric vehicles. *J Modern Power Syst Clean Energy* 2020; **8**: 727–736.

201 Luo Z, Wu Z, Li Z, *et al.* A two-stage optimization and control for CCHP microgrid energy management. *Appl Therm Eng* 2017; **125**: 513–522.

202 Bao Z, Zhou Q, Yang Z, *et al.* A multi time-scale and multi energy-type coordinated microgrid scheduling solution—Part II: Optimization algorithm and case studies. *IEEE Trans Power Syst* 2015; **30**: 2267–2277.

203 Forough AB, Roshandel R. Lifetime optimization framework for a hybrid renewable energy system based on receding horizon optimization. *Energy* 2018; **150**: 617–630.

204 Yang Z, Jing J, Zhou F. Multi-time scale collaborative scheduling strategy of distributed energy systems for energy internet. In: *Proceedings of the 2021 IEEE Conference on Telecommunications, Optics and Computer Science (TOCS)*. Shenyang: IEEE, 2021.

205 Watari D, Taniguchi I, Goverde H, *et al.* Multi-time scale energy management framework for smart PV systems mixing fast and slow dynamics. *Appl Energy* 2021; **289**: 116671.